Operator's Manual

optris® Xi

80/ 400

Spot finder IR camera

Optris GmbH
Ferdinand-Buisson-Str. 14
13127 Berlin
Germany

Tel.: +49 30 500 197-0
Fax: +49 30 500 197-10

E-mail: info@optris.global
Internet: www.optris.global

optris
infrared measurements

Table of contents

Table of contents **3**

1 General Notes **7**

1.1 Intended use 7

1.2 Warranty 8

1.3 Scope of delivery 9

1.4 Maintenance 9

1.4.1 Cleaning 9

1.5 Model overview 10

2 Technical Data **11**

2.1 General specifications 11

2.2 Electrical specifications 15

2.3 Measurement specifications 16

2.4 Optical specifications 17

3 Mechanical Installation 22

3.1 Dimensions 22

3.2 Accessories....26

3.2.1 Air purge laminar 26

3.2.2 Water cooling 30

3.2.3 Shutter 33

3.2.4 Combination of air purge, water cooling and shutter 37

3.2.5 Outdoor protective housing....42

4 Electrical Installation....43

4.1 Process interface 44

4.1.1 Process interface Xi 80 44

4.1.2 Process interface Xi 400 47

4.1.3 PIN allocation Xi 80 50

4.1.4 PIN allocation Xi 400 51

4.1.5 Industrial Process Interface for Xi 80 (optional) 53

4.1.6 Industrial Process Interface for Xi 400 (optional) 58

4.2 Example for a Fail-Safe monitoring of the Xi with a PLC 62

4.3 USB cable extension for Xi 400 64

5 Functions 65

5.1 Autonomous operation Xi 80 65

5.2 Ethernet Xi 80 70

6 Software PIX Connect 75

6.1 Installation and initial start-up 76

6.2 Software window 78

6.3 Basis features of the software PIX Connect 80

7 Basics of Infrared Thermometry 83

8 Emissivity 88

8.1 Definition 88

8.2 Determination of unknown emissivity 90

8.3 Characteristic emissivity 92

Appendix A – Table of emissivity for metals 93

Appendix B – Table of emissivity for non-metals 95

Appendix C – Quick start for serial communication 96

Appendix D – Interprocess Communication (IPC) 98

Appendix E – PIX Connect Resource Translator 99

Appendix F – Wiring diagrams PIF for Xi 400 100

Appendix G – Declaration of Conformity 104

1 General Notes

1.1 Intended use

Thank you for choosing the **optris® Xi** spot finder infrared camera.
The optris Xi calculates the surface temperature based on the emitted infrared energy of objects [**►7 Basics of Infrared Thermometry**]. The two-dimensional detector (FPA - focal plane array) allows a measurement of an area and will be shown as thermal image using standardized palettes. The radiometric processing of the picture data enables the user to do a comfortable detailed analysis with the software PIX Connect.

The Xi is a precise instrument and contains an extremely sensitive infrared detector and a high-quality lens.

The alignment of the camera to **intensive energy sources** (e.g. devices which emit laser radiation or reflections of such equipment) can cause an **irreparable defect of the infrared detector**. This is also valid if the camera is switched off.

Such kinds of damages are excluded from warranty.

Read the manual carefully before the initial start-up. The producer reserves the right to change the herein described specifications in case of technical advance of the product.

- Avoid abrupt changes of the ambient temperature.
- Avoid static electricity, arc welders, and induction heaters. Keep away from very strong EMF (electromagnetic fields).
- In case of problems or questions which may arise when you use the infrared camera, please contact our service department.

► All accessories can be ordered according to the referred part numbers in brackets [ ].

1.2 Warranty

Each single product passes through a quality process. Nevertheless, if failures occur contact the customer service at once. The warranty period covers 24 months starting on the delivery date. After the warranty is expired the manufacturer guarantees additional 6 months warranty for all repaired or substituted product components. Warranty does not apply to damages, which result from misuse or neglect. The warranty also expires if you open the product. The manufacturer is not liable for consequential damage or in case of a non-intended use of the product.
If a failure occurs during the warranty period the product will be replaced, calibrated or repaired without further charges. The freight costs will be paid by the sender. The manufacturer reserves the right to exchange components of the product instead of repairing it. If the failure results from misuse or neglect the user has to pay for the repair. In that case you may ask for a cost estimate beforehand.

1.3 Scope of delivery

- Xi 80 or Xi 400
- USB cable: 1 m (standard scope of supply, no IP67 protection class)
  1 m, 3 m, 5 m, 10 m, 20 m (optional, for industrial applications, with IP67)
- Mounting nut and mounting bracket (adjustable in one axis, tripod thread)
- Process interface cable incl. terminal block (1 m)
- Software package PIX Connect
- Quick start guide

1.4 Maintenance

Never use cleaning compounds which contain solvents (neither for the lens nor for the housing).

1.4.1 Cleaning

Blow off loose particles using clean compressed air. The lens surface can be cleaned with a soft, humid tissue (moistened with water) or a lens cleaner (e.g. Purosol or B+W Lens Cleaner).

1.5 Model overview

The cameras of the PI-series are available in the following basic versions:

Modell	Model code	Temperature range	Spectral range	Frame rate	Typical applications
Xi 80	IR	-20 to 900 °C	7.5 - 13 µm	50 Hz	Surface measurements in industrial application, autonomous operation with automatic spot finder
Xi 400	IR	-20 to 900 °C	7.5 - 13 µm	80 Hz/ 27 Hz	Real-time thermographic images in high speed; Detection of smallest temperature differences

Table 1: Model overview

2 Technical Data

2.1 General specifications

Environmental rating:	IP67 (NEMA-4)
Ambient temperature:	0...50 °C
Storage temperature:	-40...70 °C
Relative humidity:	10...95 %, non-condensing
Material (housing):	Stainless steel
Dimensions:	Xi 80: 36 x 90 mm / M30 Xi 400: 36 x 100 mm / M30
Weight:	Xi 80: 185 g Xi 400: 200 g
Cable length:	USB: 1 m (standard), 3 m, 5 m, 10 m, 20 m Ethernet / RS485 (Xi 80): 100 m
Vibration[1)]:	IEC 60068-2-6 (sinus shaped) IEC 60068-2-64 (broadband noise)
Shock[1)]:	IEC 60068-2-27 (25 G and 50 G)

[1)] Used standards for vibration and shock:

IEC 60068-1:1988 + **Corr.** 1988 + **A1**: 1992 **DIN EN 60068-1**:1995-03
„Umweltprüfungen - Teil 1: Allgemeines und Leitfaden“

IEC 60068-2-6:2007 **DIN EN 60068-2-6; VDE 0468-2-6**:2008-10
„Umgebungseinflüsse - Teil 2-6: Prüfverfahren - Prüfung Fc: Schwingen (sinusförmig)“

IEC 60068-2-27:2008 **DIN EN 60068-2-27; VDE 0468-2-27**:2010-02
„Umgebungseinflüsse - Teil 2-27: Prüfverfahren - Prüfung Ea und Leitfaden: Schocken“

IEC 60068-2-47:2005 **DIN EN 60068-2-47**:2006-03
„Umgebungseinflüsse - Teil 2-47: Prüfverfahren - Befestigung von Prüflingen für Schwing-, Stoß- und ähnliche dynamische Prüfungen“

IEC 60068-2-64:2008 **DIN EN 60068-2-64; VDE 0468-2-64**:2009-04
„Umgebungseinflüsse - Teil 2-64: Prüfverfahren - Prüfung Fh: Schwingen, Breitbandrauschen (digital geregelt) und Leitfaden“

Figure 1: Used standards

Stress program (camera in operation):

Shock, half sinus 25 G – testing Ea 25 G (acc. IEC 60068-2-27)			
Acceleration	245 m/s^2	(25 G)	
Pulse duration	11 ms		
Number of directions	6	(3 axes with 2 directions each)	
Duration	600 Shocks	(100 Shocks each direction)	

Shock, half sinus 50 G – testing Ea 50 G (acc. IEC 60068-2-27)			
Acceleration	490 m/s^2	(50 G)	
Pulse duration	11 ms		
Number of directions	6	(3 axes with two directions each)	
Duration	18 Shocks	(3 Shocks each direction)	
Vibration, sinus shaped – testing Fc (acc. IEC60068-2-6)			
Frequency range	10 - 500 Hz		
Acceleration	29.42 m/s^2	(3 G)	
Frequency change	1 Octave/ min		
Number of axes	3		
Duration	1:30 h	(3 x 0.30 h)	
Vibration, broadband noise – testing Fh (acc. IEC60068-2-64)			
Frequency range	10 - 2000 Hz		

Acceleration	39.3 m/s^2	(4.01 G_{RMS}))	
Frequency spectrum	10 - 106 Hz	0.9610 $(m/s^2)^2/Hz$	(0.010 G^2/Hz)
	106 - 150 Hz	+6 dB/ Octave	
	150 - 500 Hz	1.9230 $(m/s^2)^2/Hz$	(0.020 G^2/Hz)
	500 - 2000 Hz	-6 dB/ Octave	
	2000 Hz	0.1245 $(m/s^2)^2/Hz$	(0.00126 G^2/Hz)
Number of axes	3		
Duration	3 h	(3 x 1 h)	

2.2 Electrical specifications

Power Supply:	Xi 80: USB/ PoE/ 5-30 VDC Xi 400: USB
Current draw:	Max 500 mA
AO: Output Standard/Internal Process Interface (PIF out)	0 - 10 V (Xi 400), 0/4 – 20 mA (Xi 80) (Main measure area, measure area, internal temperature, flag status, alarm, frame sync, fail-safe, external communication) [**▶ Appendix F – Wiring diagrams PIF**]
AI: Input Standard/Internal Process Interface (PIF in)	0 - 10 V (Emissivity, ambient temperature, reference temperature, uncommitted value, flag control, triggered recording, triggered snapshots, triggered line-scanner, triggered event grabber, reset peak-/valley-hold) [**▶ Appendix F – Wiring diagrams PIF**]
DI: Digital Input Standard Process Interface (Xi 400)	Flag control, triggered recording, triggered snapshots, triggered line-scanner, triggered event grabber, reset peak-/valley-hold [**▶ Appendix F – Wiring diagrams PIF**]
Digital interface:	Xi 80: USB 2.0/ Ethernet/ RS485 Xi 400: USB 2.0/ optional USB to GigE (PoE) conversion

2.3 Measurement specifications

	Xi 80	Xi 400
Temperature ranges	-20...100 °C; 0...250 °C; (20) 150...900 °C	
Spectral range	7.5 - 13 µm	
Detector	UFPA, 80 x 80 pixel @ 50 Hz	UFPA, 382 x 288 pixel @ 80 Hz/ 27 Hz
Lenses (FOV)	12° x 12° (F=1,0); 30° x 30° (F=0,9); 55° x 55° (F=0,9); 80° x 80° (F=0,9)	18° x 14° (F=1,1); 29° x 22° (F=0,9); 53° x 38° (F=0,9); 80° x 54° (F=0,9)
Microscope lens (FOV)	-	18° x 14° (F=1,1, minimum spot size: 81 µm @ 90 mm, working distance: 90-110 mm)
Optical resolution	190:1 (12° optic)	390:1 (18° optic)
System accuracy[2)]	±2 °C or ±2 %	
Temperature resolution (NETD):	100 mK	80 mK
Warm-up time	10 min	
Emissivity	0.100...1.100	
Software	PIX Connect	

[1)] Accuracy statement effective from 150 °C
[2)] At ambient temperature 23±5 °C; whichever is greater

2.4 Optical specifications

Make sure that the focus of thermal channel is adjusted correctly. The cameras have a **motorized focus**, which can be adjusted in the PIX Connect software (Menu **View/ Windows/ Distance** or over the icon). An adjustment to the left leads to the focus setting "near" and an adjustment to the right to the focus setting "infinite".

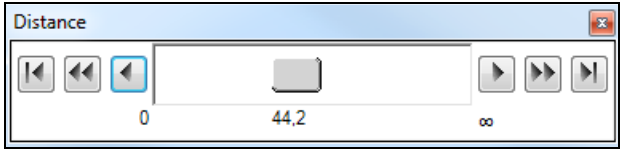

Figure 2: Motorized focus settings in PIX Connect

The variety of different lenses offers the possibility to precisely measure objects in different distances. We offer lenses for close, standard distances and large distances. Please note that the Xi has a fixed optic. A change of optics is not possible. Different parameters are important if using infrared cameras. They display the connection between the distance of the measured object and the size of the pixel (**Table 2**).

- **HFOV**: Horizontal enlargement of the total measuring at object level
- **VFOV**: Vertical enlargement of the total measuring at object level
- **IFOV**: Size at the single pixel at object level
- **DFOV**: Diagonal dimension of the total measuring field at object level
- **MFOV**: Recommended, smallest measured object size of 3 x 3 pixel (Xi 400) and 2 x 2 pixel (Xi 80)

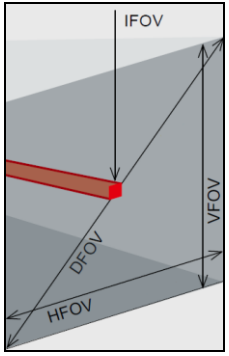

The following tables with examples showing what spot sizes and pixel sizes will be reached in which distance. For individual configuration there are different lenses available. Wide angle lenses have a radial distortion due to their large opening angle; the software PIX Connect has an algorithm which corrects this distortion. As an alternative to the tables below, the optics calculator can also be used on the optris website (https://www.optris.global/optics-calculator).

Table 2:

Xi 80 80 x 80 px	Focal length [mm]	Minimum measurement distance*	Angel		Distance to measurement object [m]											
					0.05	0.1	0.2	0.3	0.5	1	2	4	6	10	30	100
F05 Standard lens	5	0,2 m	30°	HFOV [m]	0.028	0.056	0.111	0.167	0.279	0.557	1.115	2.230	3.346	5.6	16.7	55.8
			30°	VFOV [m]	0.028	0.056	0.111	0.167	0.279	0.557	1.115	2.230	3.346	5.6	16.7	55.8
			43°	DFOV [m]	0.039	0.079	0.158	0.24	0.39	0.79	1.58	3.15	4.7	7.9	23.7	78.9
			6,67 mrad	IFOV [mm]	0.33	0.67	1.33	2.0	3.33	6.67	13.33	26.67	40.00	66.67	200.00	666.67
F13 Telephoto lens	13	0,3 m	12°	HFOV [m]		0.022	0.043	0.065	0.11	0.21	0.43	0.85	1.28	2.1	6.4	21.3
			12°	VFOV [m]		0.022	0.043	0.065	0.11	0.21	0.43	0.85	1.28	2.1	6.4	21.3
			17°	DFOV [m]		0.031	0.061	0.092	0.15	0.30	0.60	1.20	1.81	3.0	9.0	30.1
			2,66 mrad	IFOV [mm]		0.3	0.5	0.8	1.3	2.7	5.3	10.6	15.9	26.6	79.7	265.6
F03 Wide angle lens	3	0,2 m	55°	HFOV [m]	0.057	0.110	0.218	0.325	0.539	1.07	2.14	4.27	6.41	10.7	32.0	106.7
			55°	VFOV [m]	0.057	0.110	0.218	0.325	0.539	1.07	2.14	4.27	6.41	10.7	32.0	106.7
			79°	DFOV [m]	0.080	0.156	0.308	0.459	0.762	1.52	3.02	6.04	9.06	15.1	45.3	150.9
			11,15 mrad	IFOV [mm]	0.6	1.2	2.3	3.4	5.6	11.2	22.4	44.6	66.9	111.5	334.5	1114.8
F02 Super wide angle lens	2	0,2 m	80°	HFOV [m]	0.090	0.174	0.343	0.509	0.884	1.682	3.357	6.708	10.058	16.8	50.3	167.5
			80°	VFOV [m]	0.090	0.174	0.343	0.509	0.88	1.682	3.357	6.708	10.058	16.8	50.3	167.5
			113°	DFOV [m]	0.127	0.246	0.483	0.72	1.19	2.38	4.75	9.49	14.2	23.7	71.1	236.9
			15,45 mrad	IFOV [mm]	0.08	1.6	3.2	4.7	7.8	15.5	31.0	61.9	92.8	154.6	463.7	1545.5

** Note: The accuracy of measurement can be outside of the specifications for distances below the defined minimum distance.*

Xi 400 382 x 288 px	Focal length [mm]	Minimum measurement distance*	Angle		Distance to measurement object [m]											
					0.05	0.1	0.2	0.3	0.5	1	2	4	6	10	30	100
F13 Standard lens	13	0.2 m	29°	HFOV [m]		0.051	0.104	0.16	0.26	0.53	1.06	2.11	3.17	5.3	15.9	52.9
			22°	VFOV [m]		0.038	0.078	0.12	0.20	0.39	0.79	1.58	2.36	3.9	11.8	39.4
			37°	DFOV [m]		0.064	0.130	0.20	0.33	0.66	1.32	2.64	3.96	6.6	19.8	66.0
			1.34 mrad	IFOV [mm]		0.1	0.263	0.4	0.7	1.3	2.7	5.4	8.1	13.4	40.3	134.4
F20 Telephoto lens	20	0.3 m	18°	HFOV [m]			0.068	0.101	0.17	0.33	0.66	1.31	1.97	3.3	9.8	32.7
			14°	VFOV [m]			0.051	0.076	0.13	0.25	0.49	0.99	1.48	2.5	7.4	24.6
			23°	DFOV [m]			0.086	0.13	0.21	0.41	0.82	1.64	2.46	4.1	12.3	40.9
			0.85 mrad	IFOV [mm]			0.170	0.26	0.4	0.9	1.7	3.4	5.1	8.5	25.5	85.0
F08 Wide angle lens	8	0.2 m	53°	HFOV [m]		0.107	0.21	0.31	0.51	1.01	2.00	4.00	6.00	10.0	29.9	100.0
			38°	VFOV [m]		0.076	0.15	0.22	0.35	0.70	1.39	2.78	4.17	6.9	20.8	69.5
			66°	DFOV [m]		0.132	0.25	0.38	0.62	1.23	2.44	4.87	7.30	12.2	36.5	121.8
			2.20 mrad	IFOV [mm]		0.3	0.5	0.7	1.1	2.2	4.4	8.8	13.2	22.0	66.0	220.0
F06 Super wide angle lens	6	0.2 m	80°	HFOV [m]	0.069	0.149	0.30	0.46	0.78	1.57	3.14	6.29	9.43	15.7	47.3	157.7
			54°	VFOV [m]	0.047	0.098	0.20	0.30	0.51	1.01	2.03	4.06	6.10	10.2	30.5	101.7
			94°	DFOV [m]	0.084	0.178	0.36	0.55	0.93	1.87	3.74	7.49	11.23	18.7	56.3	187.6
			3.01 mrad	IFOV [mm]	0.2	0.3	0.6	0.9	1.5	3.0	6.0	12.0	18.1	30.1	90.3	300.9

** Note: The accuracy of measurement can be outside of the specifications for distances below the defined minimum distance.*

Xi 400 Macro optics 382 x 288 px	Focal length [mm]	Minimum measurement distance*	Angle	Distance to measurement object [m]			
					0.09	0.1	0.11
F20 CF Macro optics	20	0.09 m	18°	HFOV [m]	0.031	0.034	0.037
			14°	VFOV [m]	0.024	0.026	0.028
			23°	DFOV [m]	0.039	0.043	0.047
			0.9 mrad	IFOV [mm]	0.08	0.09	0.10

** Note: The accuracy of measurement can be outside of the specifications for distances below the defined minimum distance.*

3 Mechanical Installation

3.1 Dimensions

The Xi is equipped with a metric M30x1 thread and can be installed either directly via the sensor thread or with help of the supplied mounting nut (standard) and adjustable mounting bracket (standard) to a mounting device available.

Figure 3: Xi with mounting bracket

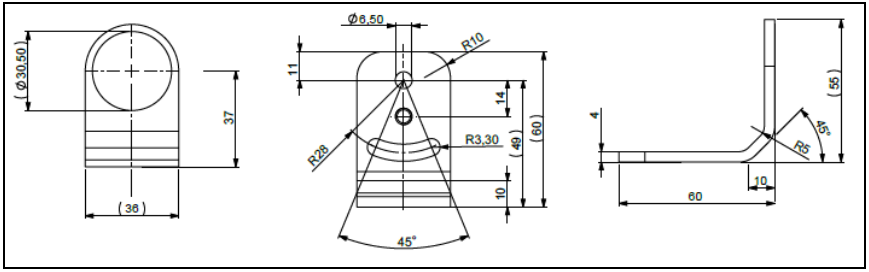

Figure 4: Mounting bracket, adjustable in one axis, with tripod thread **[Order No. - ACXIFB]** – standard scope of supply

For correct orientation, the USB port must be on the left side and the PIF port on the right side, see **Figure 5** or **Figure 6**.

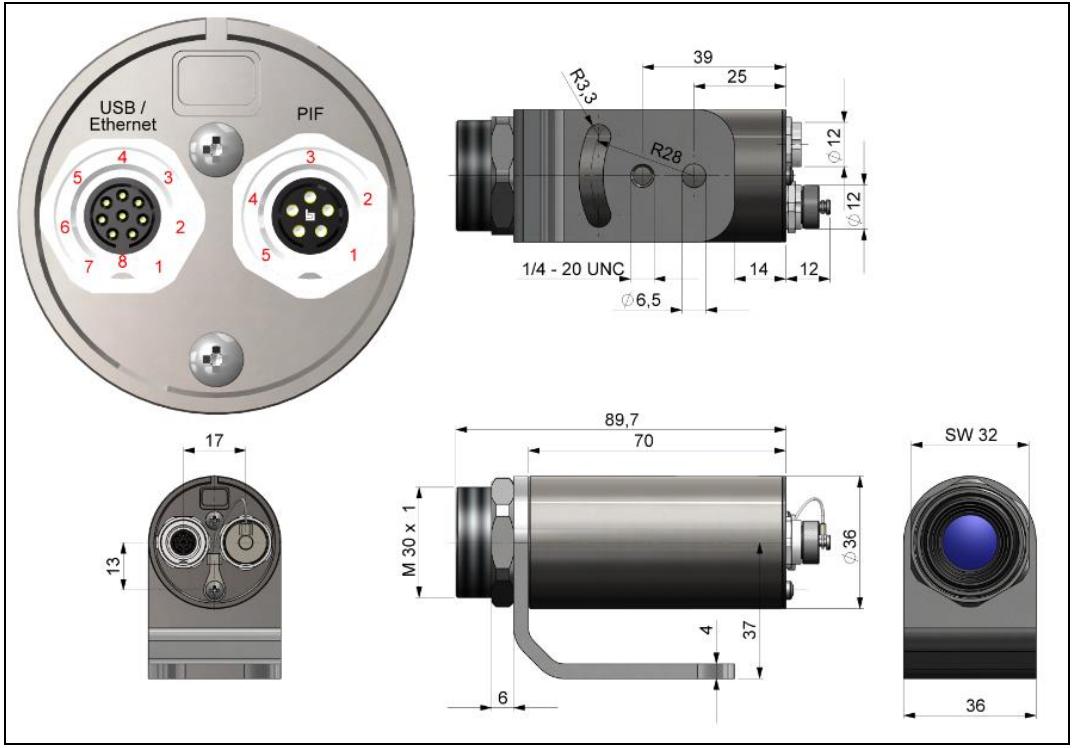

Figure 5: Xi 80, dimensions [mm]

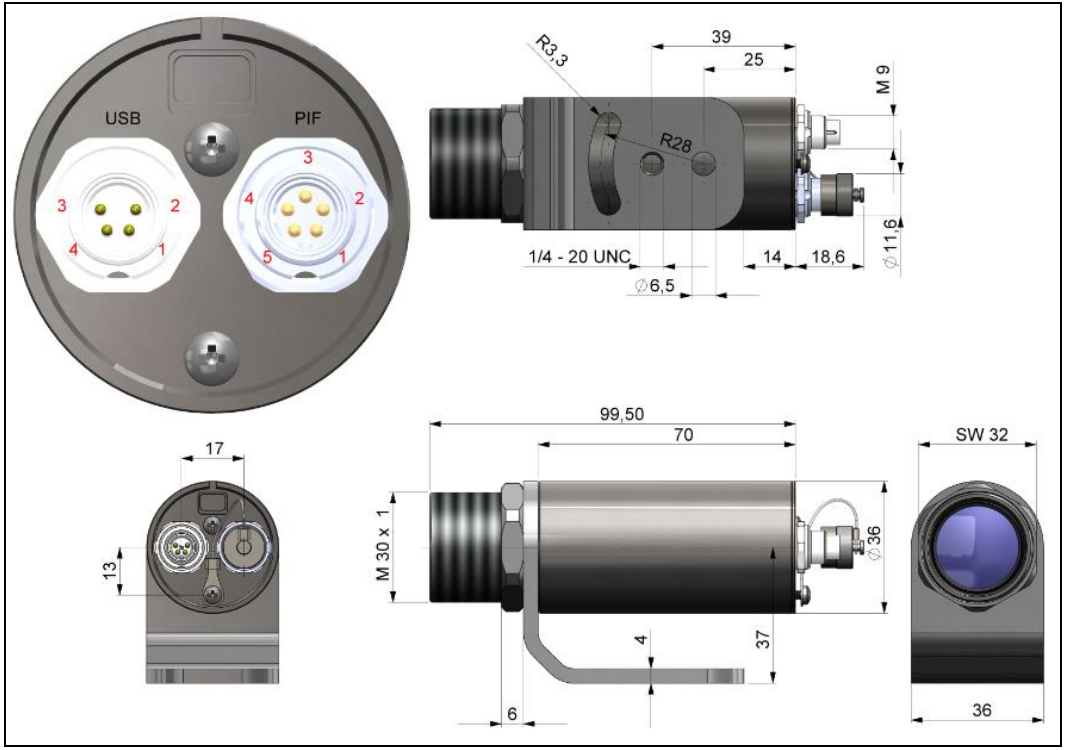

Figure 6 : Xi 400, dimensions [mm]

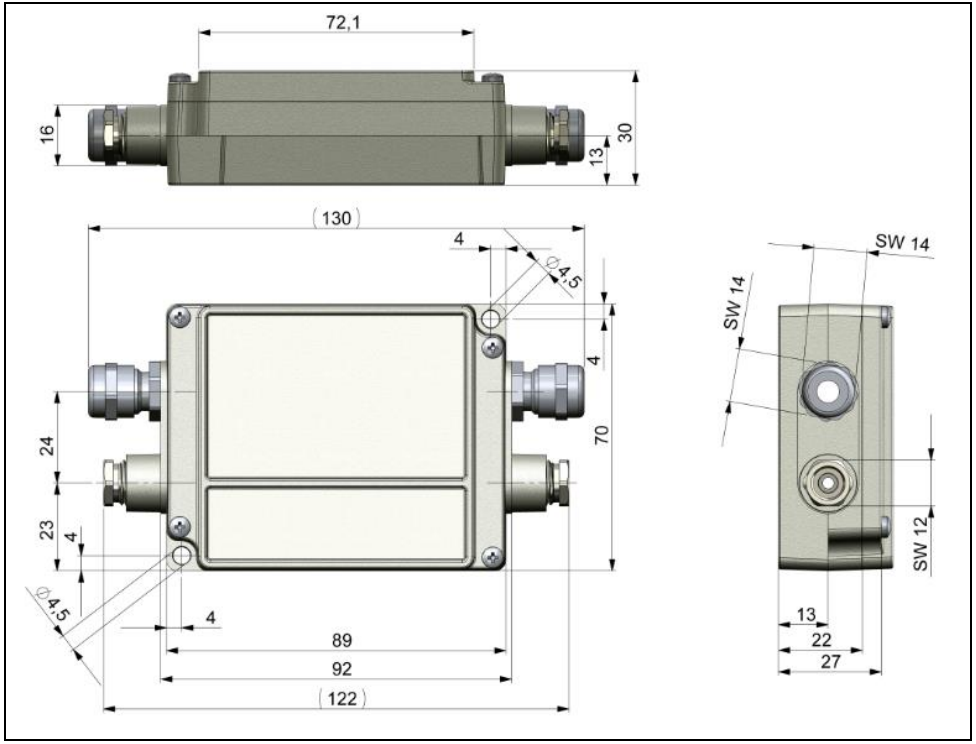

Figure 7: Industrial/stackable PIF (Process Interface) – electronic box, control box shutter, dimensions [mm]

3.2 Accessories

3.2.1 Air purge laminar

The lens must be kept clean at all times from dust, smoke, fumes and other contaminants in order to avoid reading errors. These effects can be reduced by using an air purge. (**Part-No.: ACXIAPL**)

- Make sure to use oil-free, technically clean air, only.
- The needed amount of air (approx. 2...10 l/min.) depends on the application and the installation conditions on-site.
- The laminar air purge has a Si-protective window. Typical transmission value: 0.82 (deviations possible), replacement window available under the **Part-No.: ACXIAPLPWSI**
- The corresponding mounting bracket (**Part-No.: ACXIAPLAB**) is mandatory.

Air flow

The air purge can be mounted in four different positions.

The direction of the airflow must always be clear.

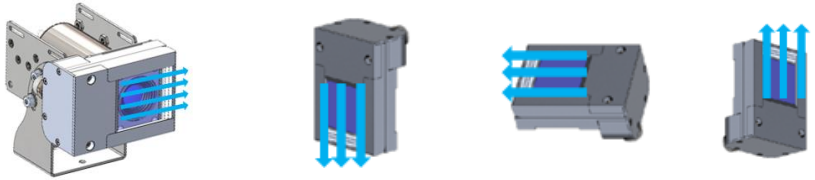

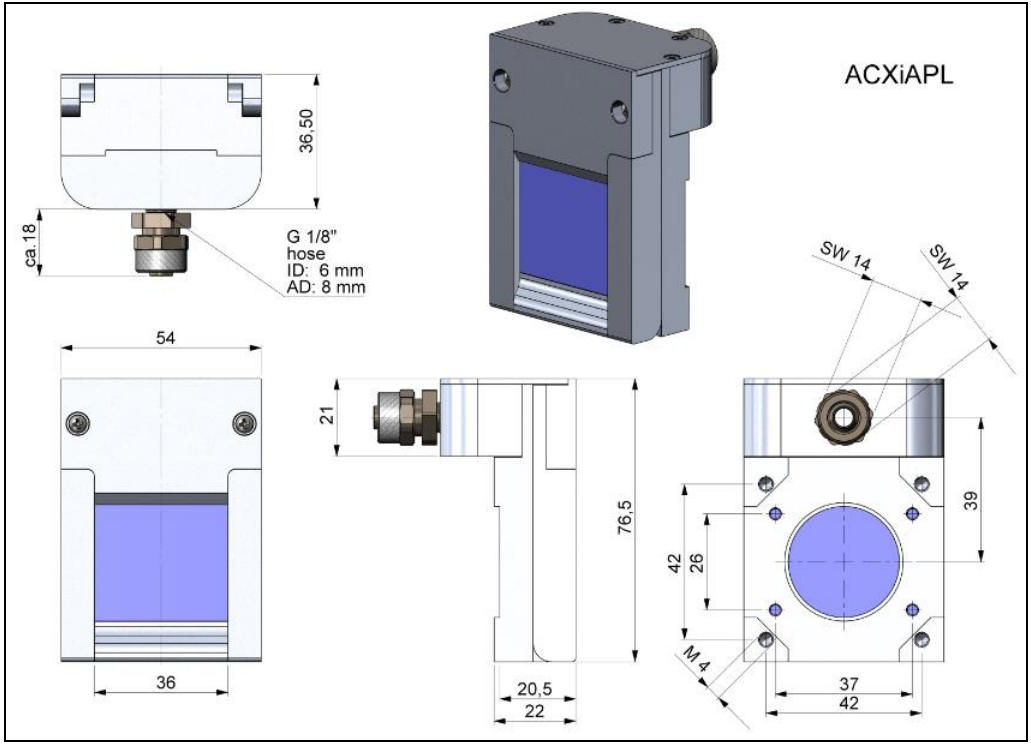

Figure 8: Laminar air purge with Si protective window, dimensions [mm]

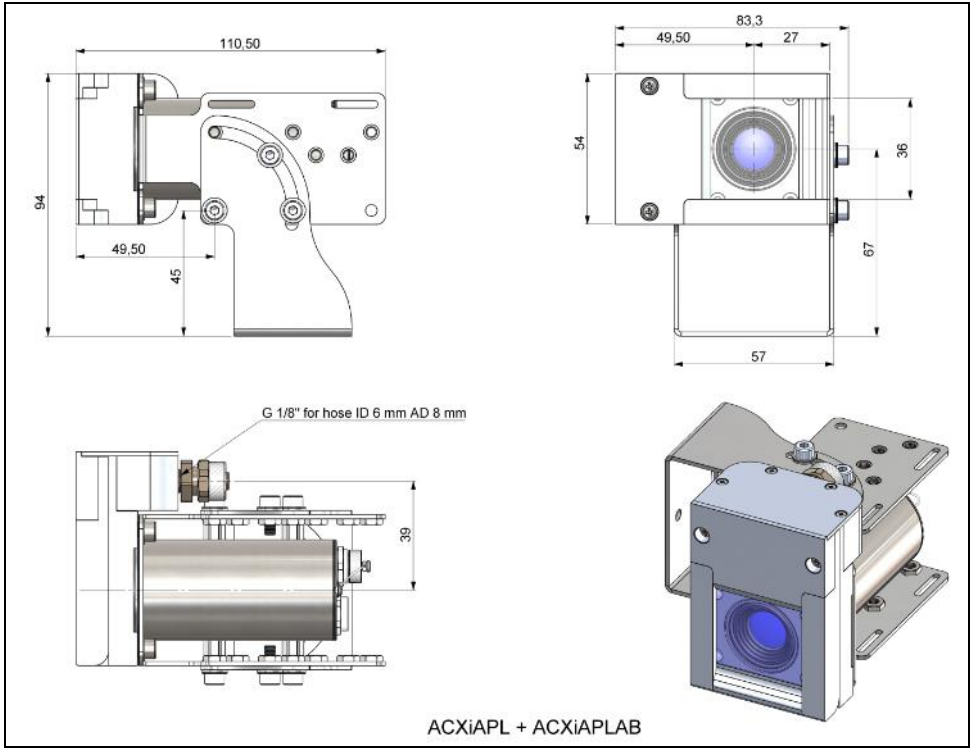

Figure 9: Laminar air purge with Si protective window (ACXIAPL) and mounting bracket (ACXIAPLAB), dimensions [mm]

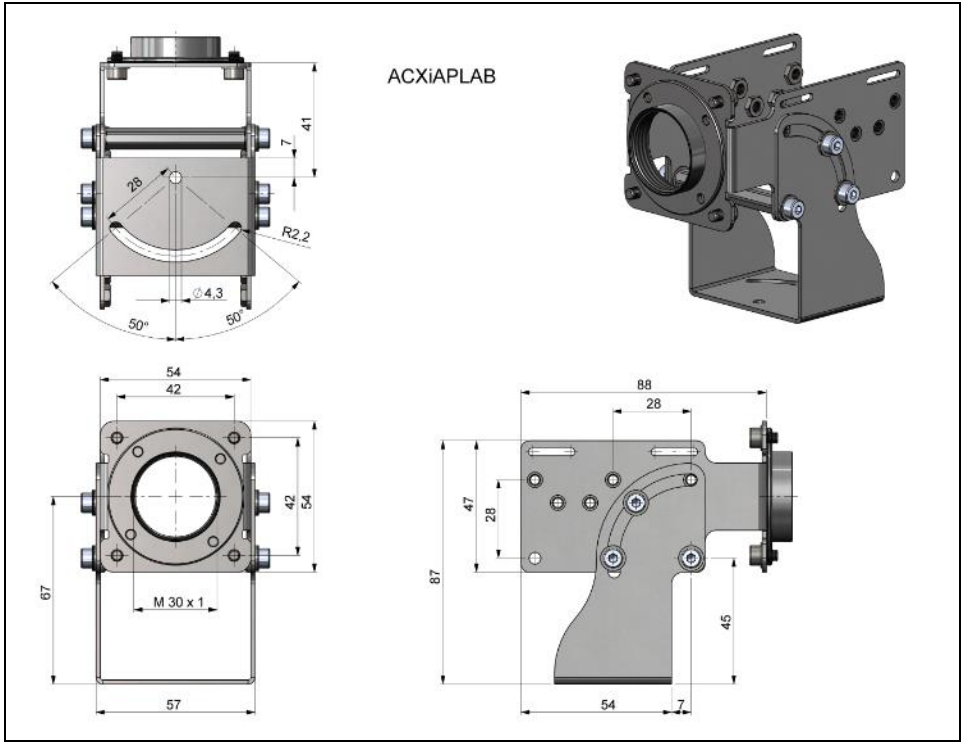

Figure 10: Mounting bracket (ACXIAPLAB), dimensions [mm]

3.2.2 Water cooling

The IR camera is for application at ambient temperatures up to 50 °C. For applications at higher ambient temperatures we recommend the usage of the optional water cooled housing (operating temperature up to 250 °C) and the optional high temperature cable (operating temperature up to 250 °C).

- When using water cooling, a corresponding mounting kit (**Part-No.: ACXIxxxWAKx**) is required (WAK1: Usage without air purge, WAK2: Usage with air purge).
- Water flow rate: approx. 1-5 l/ min (Cooling water temperature should not exceed 30 °C)
- When using the water cooling the air purge (**Part-No.: ACXIAPL**) is recommended in order to avoid condensation

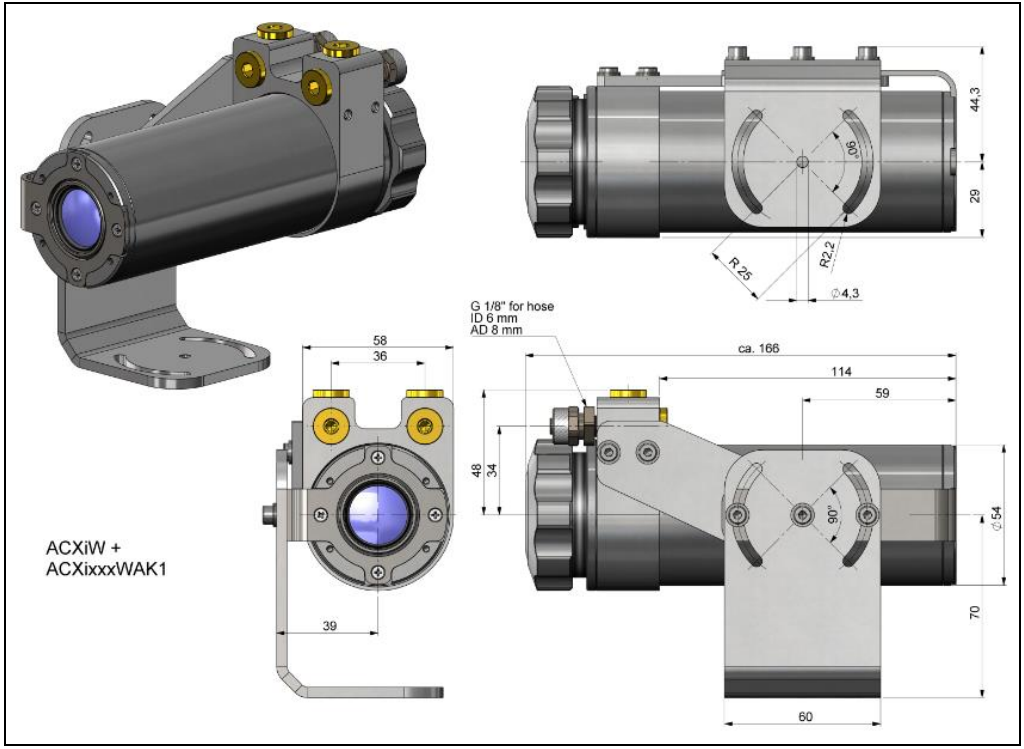

Figure 11: Water cooling (ACXIW) and mounting kit (ACXIxxxWAK1), dimensions [mm]

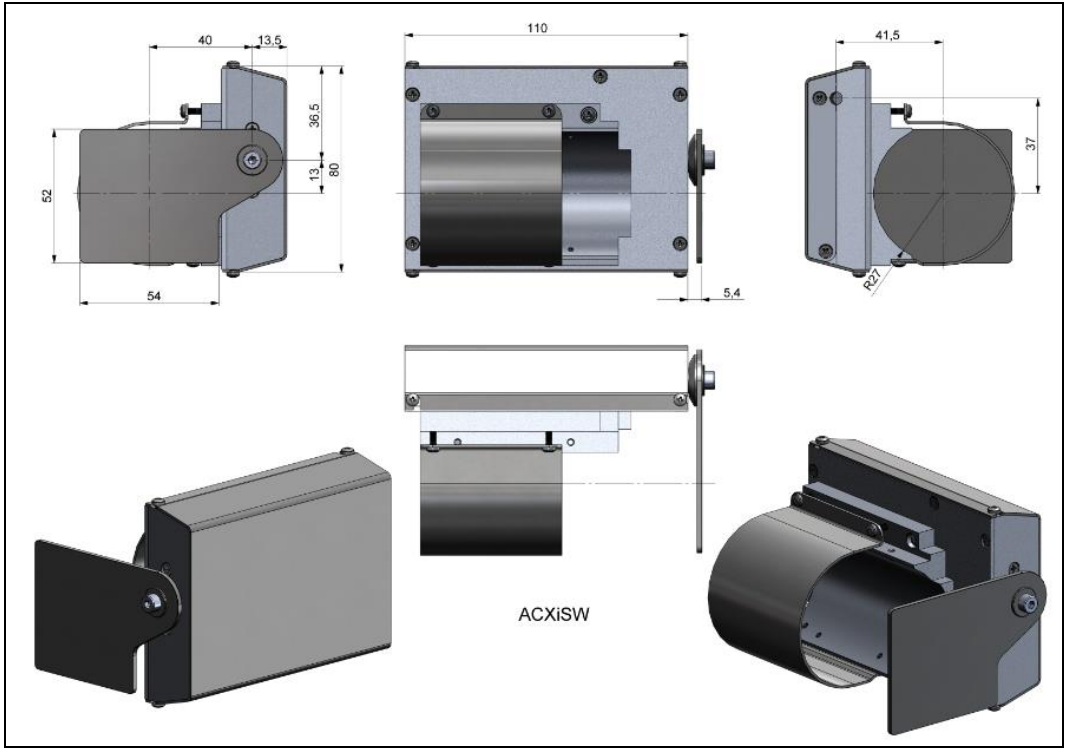

Figure 12: Shutter for water cooling (ACXISW), dimensions [mm]

3.2.3 Shutter

To protect the optics of the camera, an optional shutter (closing mechanism) can be purchased. It is equipped with a servomotor that can open and close a mechanical lock as needed. The special feature of the shutter is not only the opening and closing, but also the complete seal in the closed state. This ensures that the shutter is completely closed and no dirt can get on the optics.

- The shutter has a 100 ms fast-closing mode.
- Complete seal when closed.
- Includes a control box for connections.
- Shutter can be used in combination with Process Interface (PIF).
- The corresponding mounting bracket (**Part-No.: ACXIAPLAB**) is mandatory.

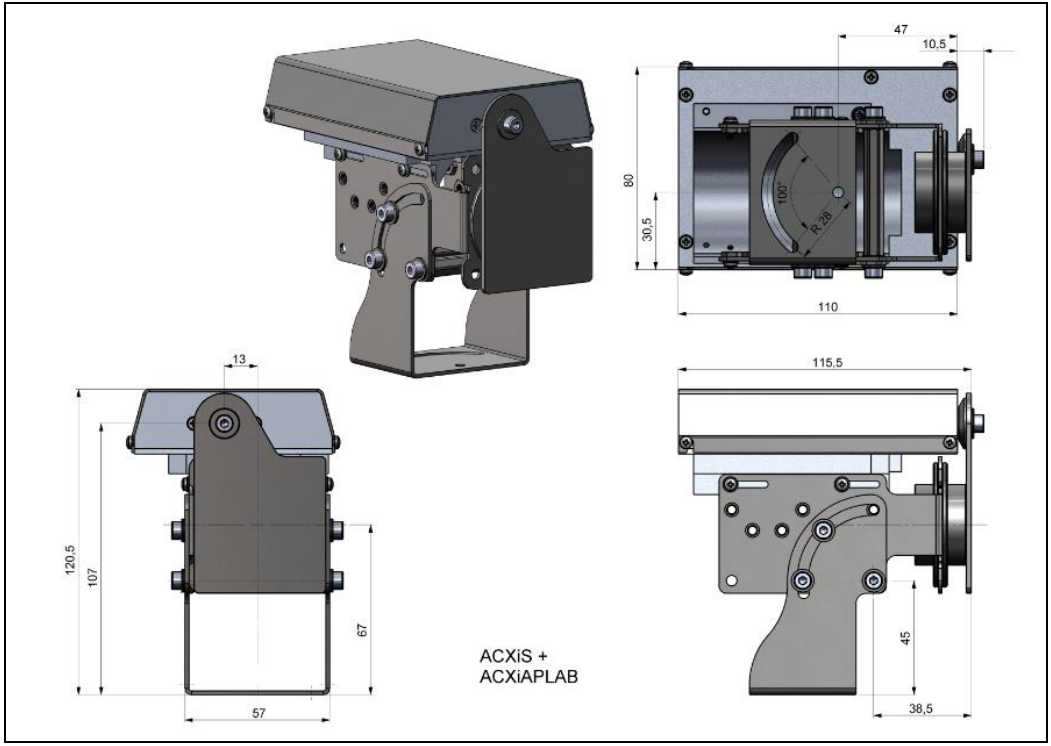

Figure 13: Shutter (ACXIS) with mounting bracket (ACXIAPLAB), dimensions [mm]

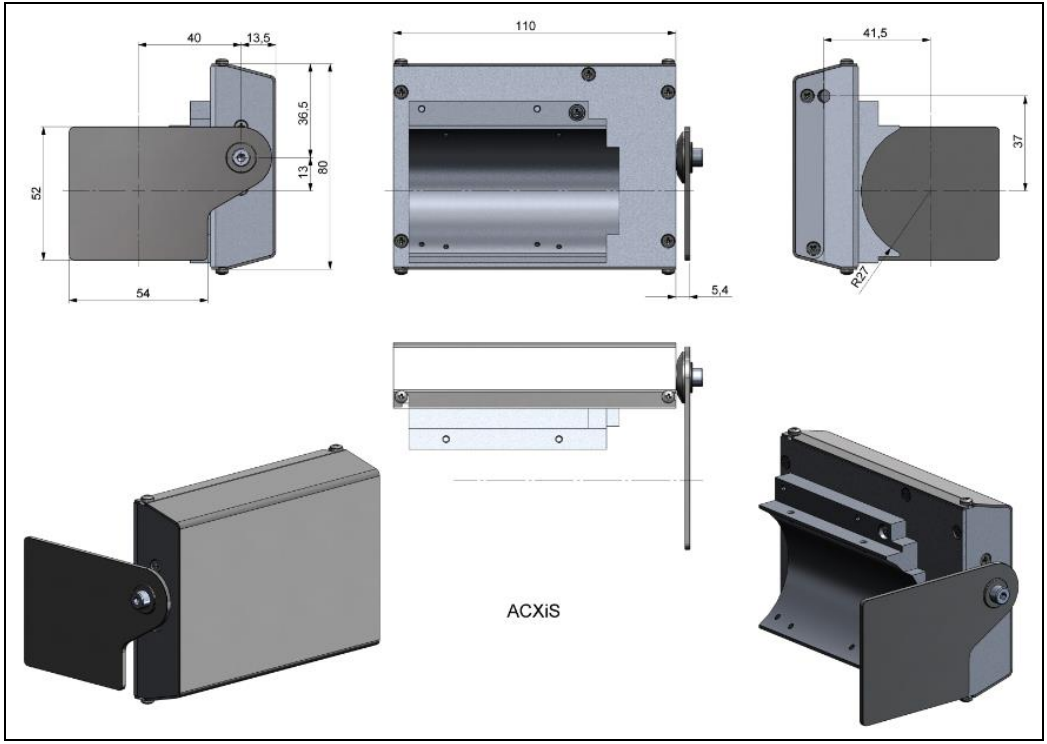

Figure 14: Shutter (ACXIS), dimensions [mm]

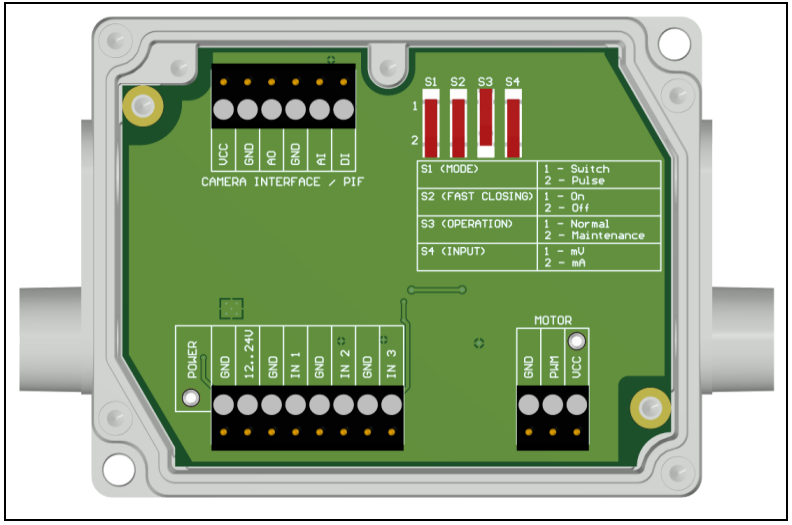

Figure 15: Control box of shutter, dimensions (see **Figure 7**)

Power supply: 12-24 V

Upper terminal screw Connection for Process Interface (PIF)

Switch for different operation modes:

S1: Switching between switch operation and pulse operation
S2: Activation/deactivation of fast-closing mode
S3: Only for factory calibration (Switch must be at Normal)
S4: Switching between mV or mA input

Lower screw terminal: Connection for power supply, Inputs (Start/Stop signal) and Motor

Inputs (Start/Stop signal):

IN 1: Trigger input for normal operation (S1)
IN 2: Currently no usage
IN 3: Trigger input for fast-closing mode (S2)

3.2.4 Combination of air purge, water cooling and shutter

It is possible to combine all three components (air purge, water cooling and shutter) with each other. It should be noted that there are differences between the Xi 80 and Xi 400. Various mounting kits (ACXIxxxWAKx) are available in combination with water cooling. The mounting bracket (ACXIAPLAB) is always required for air purge and shutter. For water cooling (ACXIW), the mounting bracket is included and does not have to be ordered separately.

Combinations / Part-No.:	ACXIAPL	ACXIAPLAB	ACXIS	ACXISW	ACXIW	ACXI80WAK1	ACXI80WAK2	ACXI400WAK1	ACXI400WAK2
Air purge	✓	✓							
Water cooling Xi 80					✓	✓			
Water cooling Xi 400					✓			✓	
Shutter		✓	✓						
Air purge and water cooling Xi 80	✓				✓		✓		
Air purge and water cooling Xi 400	✓				✓				✓
Air purge and shutter	✓	✓	✓						
Water cooling and shutter Xi 80				✓	✓	✓			
Water cooling and shutter Xi 400				✓	✓			✓	
Air purge, water cooling and shutter Xi 80	✓			✓	✓		✓		
Air purge, water cooling and shutter Xi 400	✓			✓	✓				✓

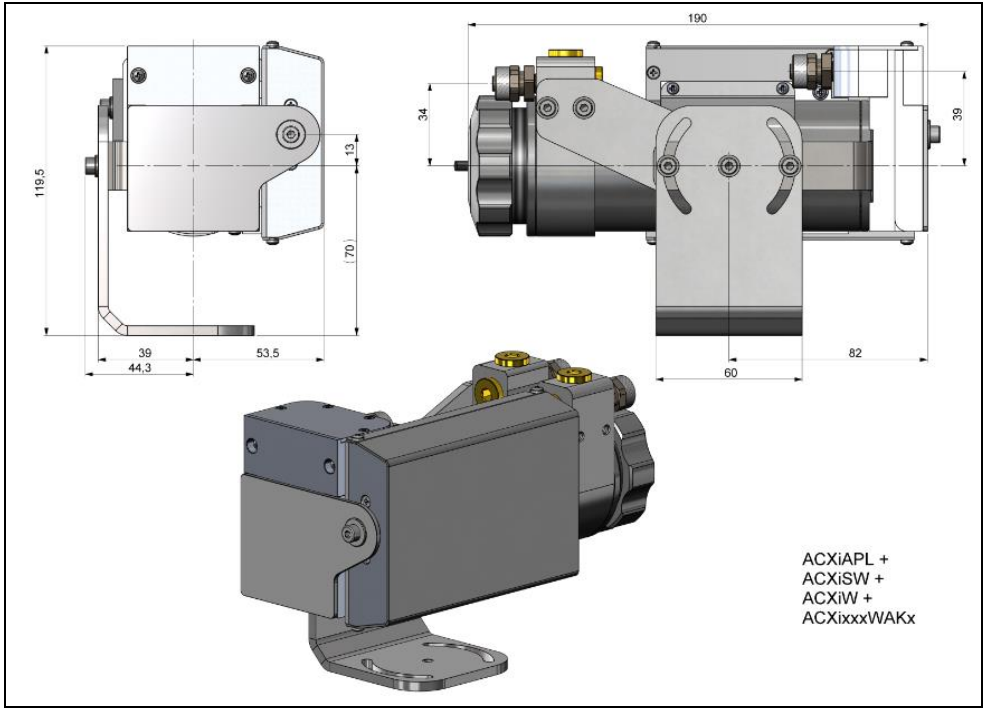

Components:

- Air purge
- Water cooling
- Shutter
- Mounting kit

Figure 16: Air purge (ACXIAPL), water cooling (ACXIW), shutter (ACXISW) and appropriate mounting kit (ACXIxxxWAKx), dimensions [mm]

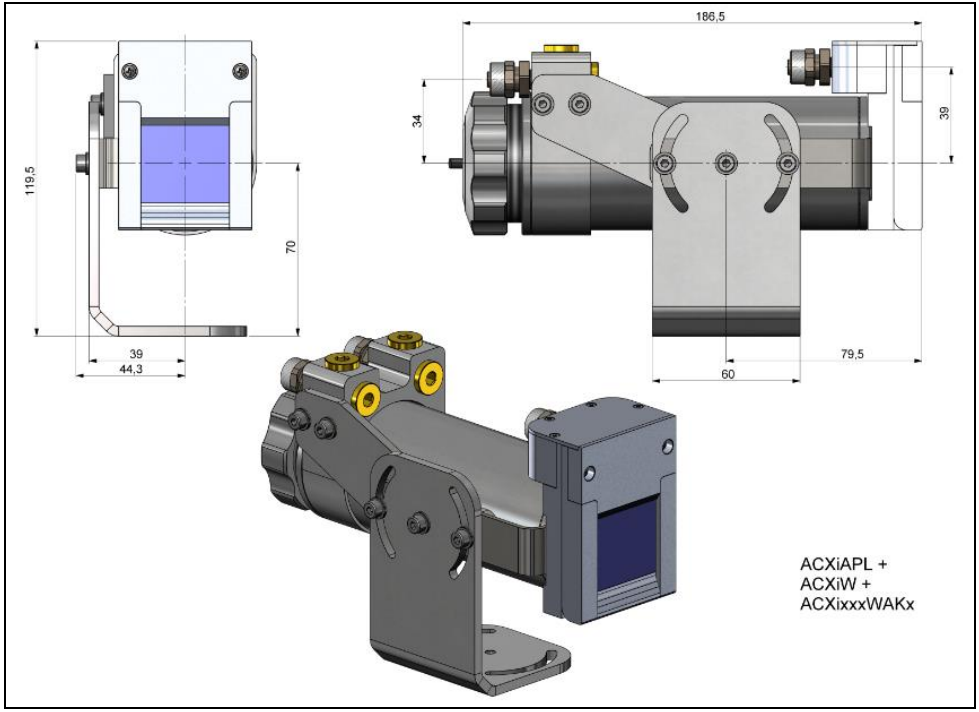

Components:

- Air purge
- Water cooling
- Mounting kit

Figure 17: Air Purge (ACXIAPL), water Cooling (ACXIW) and appropriate mounting kit (ACXIxxxWAKx), dimensions [mm]

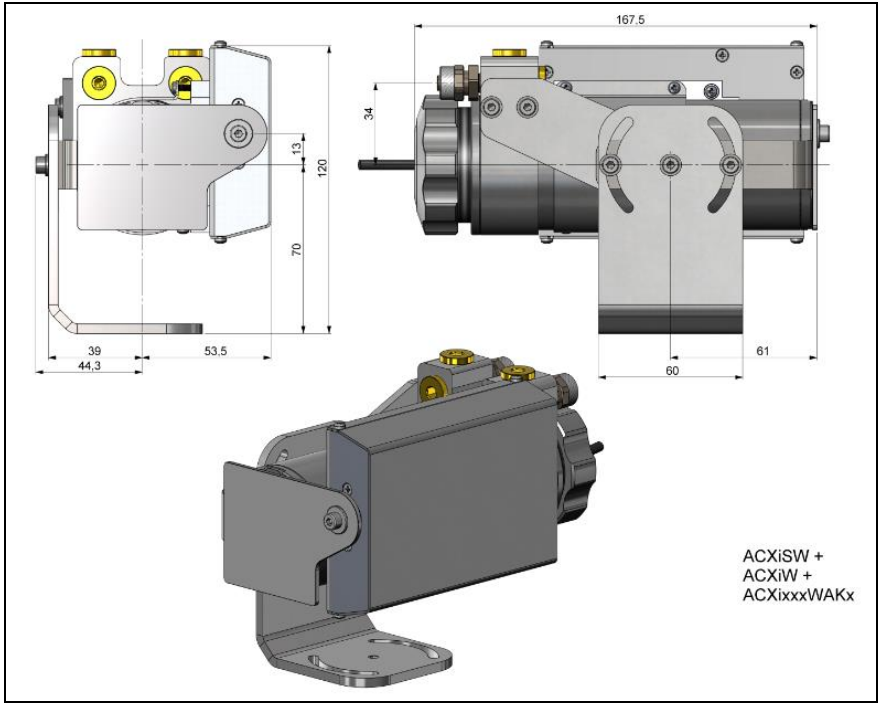

Figure 18: Water Cooling (ACXIW), Shutter (ACXISW) and appropriate mounting kit (ACXIxxxWAKx), dimensions [mm]

Components:

- Water cooling
- Shutter
- Mounting kit

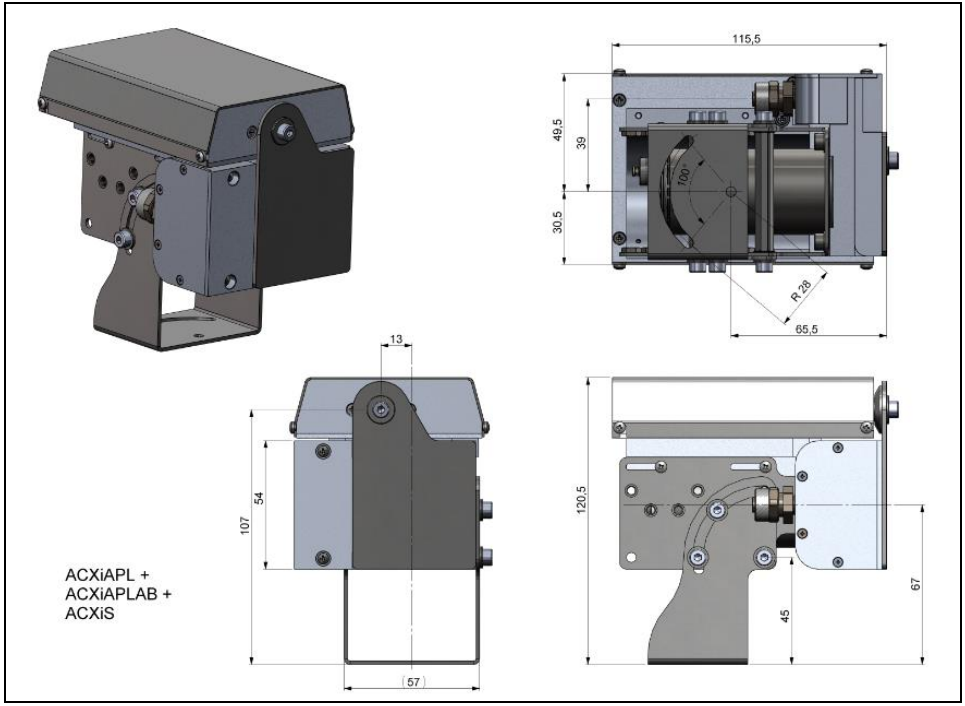

Figure 19: Air purge (ACXIAPL) with mounting bracket (ACXIAPLAB) and shutter (ACXIS), dimensions [mm]

Components:

- Air purge
- Mounting bracket
- Shutter

3.2.5 Outdoor protective housing

- The infrared camera Xi can also be used for outdoor applications by using the outdoor protective housing (Part-No.: **ACXIOPH24**).
- In addition, the industrial or stackable PIF (Part-No.: **ACCJAPIPIFMA** (Xi 400) or **ACOPHXIPIF** (Xi 80)) can be installed as an accessory without housing and a USB Server (Part-No.: **ACPIUSBSGB**).
- For detailed information see installation manual.

Figure 20: Outdoor protective housing for Xi camera

4 Electrical Installation

At the back side of the Xi there are the two connector plugs (see **Figure 21** and **Figure 22**).

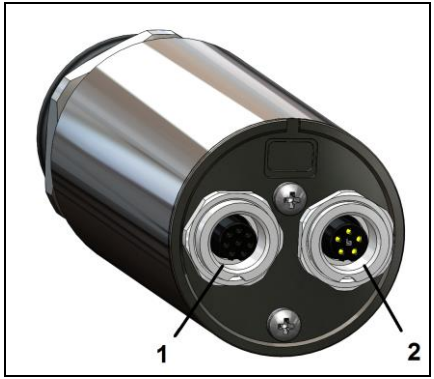

Figure 21: Backside of the Xi 80 with connectors

1 Plug for USB / Ethernet[1)] / PoE cable

2 Plug for in- and outputs or RS485

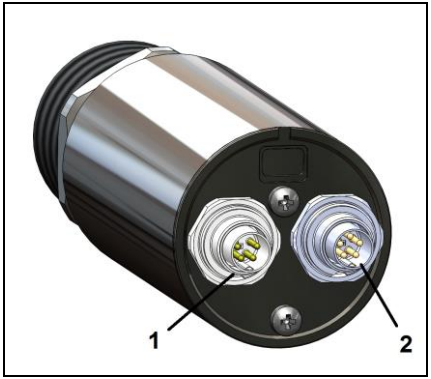

Figure 22: Backside of the Xi 400 with connectors

1 Plug for USB cable

2 Plug for PIF cable

[1)] When using the Ethernet connector, a 5...30 V DC power supply must be ensured via the terminal block

4.1 Process interface

4.1.1 Process interface Xi 80

The Xi 80 is equipped with an integrated process interface (cable with terminal block included in scope of supply), which can be programmed via the software as a direct analog input (AI), as a direct analog output (AO) in order to control the process or as an RS485 interface[1)]. The signal level is 0-10 V for AI and 0/4-20 mA for AO.

The process interface can be activated via the software choosing the following options:

Analog Input (AI):	Emissivity, ambient temperature, reference temperature, uncommitted value, flag control, triggered recording, triggered snapshots, triggered line-scanner, triggered event grabber, reset peak-/valley-hold
Analog Output (AO):	Main measure area, measure area, internal temperature, flag status, alarm, frame sync, fail-safe, external communication

[1)] Direct out- and inputs are not available while using the RS485 interface

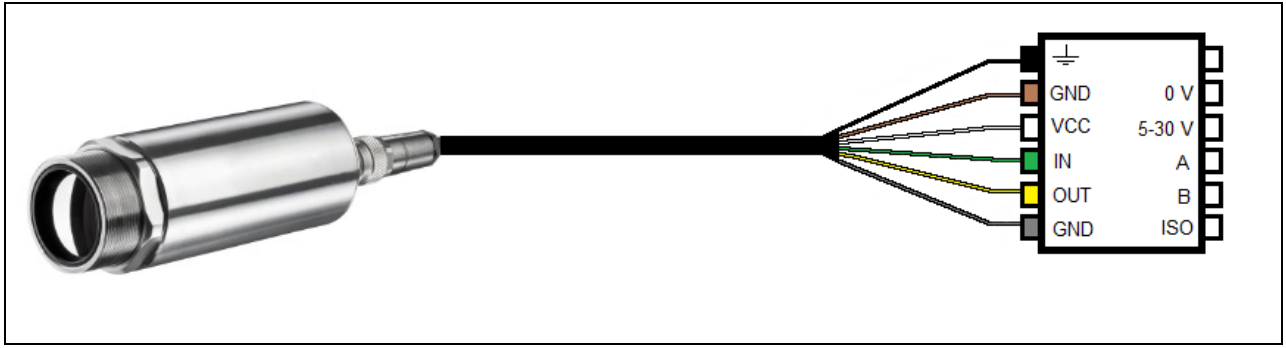

Figure 23: Configuration terminal block Xi 80

⏚		Shield	Black
GND	**0 V**	Ground	Brown
VCC	**5-30 V**	Power[1)]	White
IN	**A**	Analog/Digital Input or RS485 (A)	Green
OUT	**B**	Analog Output or RS485 (B)	Yellow
GND	**ISO**	Isolated Ground for IN and OUT	Gray

[1)] Power supply only necessary when using the Ethernet connection (without PoE) or self-sufficient operation

The Xi 80 provides the following direct inputs and outputs:

Name	Description	max range / status
AI or DI	Analog input	0-10 V [1)]
	Digital input (active-low = 0…0,6 V)	24 V
AO	Analog output Alarm output	0/4-20 mA 0/4-20 mA

[1)] *The AI is designed for max. 24 V, the voltage level above 10 V is not interpreted*

In addition to the above direct in- and outputs, the Xi 80 has an RS485 interface. This interface can be used to control the external industrial PIF.

4.1.2 Process interface Xi 400

The process interface (electronics within cable as well as industrial interface) must be powered separately (5-24 VDC). Before switching on the power the PIF cable must be connected to the camera.

The Xi is equipped with a process interface (cable with integrated electronics and terminal block), which can be programmed via the software as an Analog Input (AI) and Digital Input (DI) in order to control the camera or as an Analog Output (AO) in order to control the process. The signal level is always 0-10 V (DI = 24 V).

The process interface can be activated via the software choosing the following options:

Analog Input (AI):	Emissivity, ambient temperature, reference temperature, uncommitted value, flag control, triggered recording, triggered snapshots, triggered line-scanner, triggered event grabber, reset peak-/valley-hold
Analog Output (AO):	Main measure area, measure area, internal temperature, flag status, alarm, frame sync, fail-safe, external communication
Digital Input (DI):	Flag control, triggered recording, triggered snapshots, triggered line-scanner, triggered event grabber, reset peak-/valley-hold

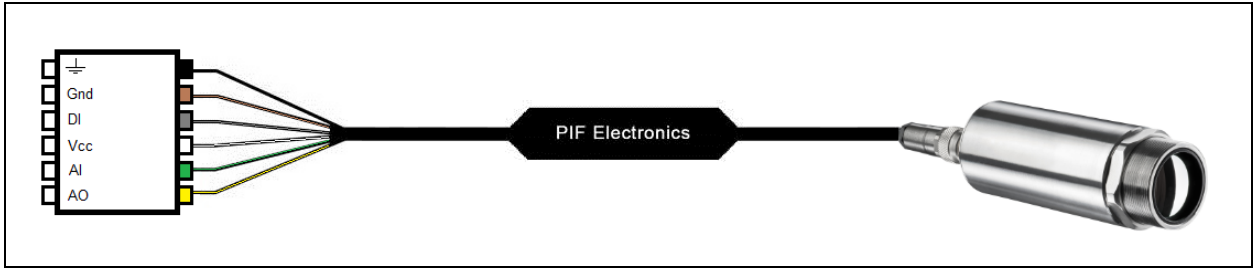

Figure 24: Configuration Standard Process Interface (PIF) Xi 400

⏚	Shield	Black
Gnd	Ground	Brown
DI	Digital Input	Gray
Vcc	Power supply, 5…24 V DC	White
AI	Analog Input	Green
AO	Analog Output	Yellow

The standard process interface provides the following inputs and outputs:

Name	Description	max range[1]/ status
AI	Analog input	0-10 V [2]
DI	Digital input (active-low = 0…0,6 V)	24 V
AO	Analog output Alarm output	0-10 V 0/ 10 V

[1] Depending on supply voltage; for 0-10 V on the AO the PIF has to be powered with min. 12 V.
[2] The AI is designed for max. 24 V, the voltage level above 10 V is not interpreted

4.1.3 PIN allocation Xi 80

Figure 25: Rear side of Xi 80

USB	Ethernet	PIF
1 VCC		**1** VCC
2 D +		**2** RS485 or AO
3 D -		**3** RS485 or AI
4	Tx +	**4** GND
5	Tx -	**5** GND-ISO
6	Rx +	
7	Rx -	
8 GND		

4.1.4 PIN allocation Xi 400

USB	PIF
1 VCC	**1** INT
2 GND	**2** SDA (I²C)
3 D -	**3** SCL (I²C)
4 D +	**4** DGND
	5 3,3 V (Out)

Figure 26: Rear side of Xi 400

If the process interface of the camera is directly connected to external hardware[1)] (without using the supplied PIF cable) an activation of the field „**Support proprietary PIF cable**" in the menu **Tools/ Configuration/ Device (PIF)** in the PIX Connect software is necessary.

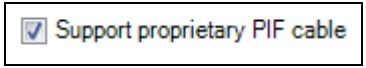

Figure 27: Support proprietary PIF cable

Consider that the input of the PIF is not protected if there is a direct PIF connection!
A voltage > 3 V on the INT pin will destroy the device!

[1)] *We recommend using only a switching contact between INT and DGND as external hardware (button, relay).*

4.1.5 Industrial Process Interface for Xi 80 (optional)

For use in industrial environment the industrial process interface with 500 V AC_{RMS} isolation voltage between Xi and process is available (connection box with IP65, 5 m, 10 m or 20 m standard or high temperature cable for camera connection, terminal for process integration). **[►Appendix F – Wiring diagrams PIF]**

Pin assignment PIF cable (industrial process interface)

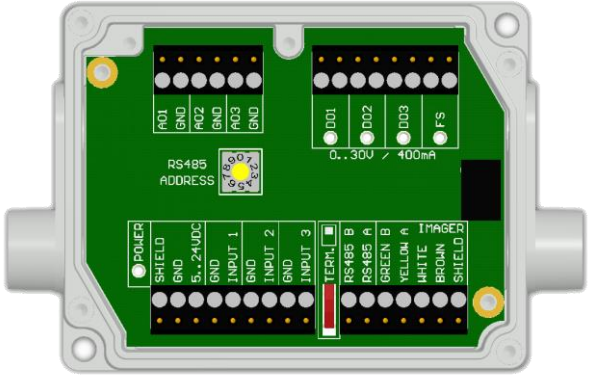

Figure 28: Connections of the industrial Process Interface for Xi 80

GREEN	RS485 B
YELLOW	RS485 A
WHITE	12 V
BROWN	GND
SHIELD	GND

The process interface can be activated via the software choosing the following options:

Analog Input (AI):	Emissivity, ambient temperature, reference temperature, uncommitted value, flag control, triggered recording, triggered snapshots, triggered line-scanner, triggered event grabber, reset peak-/valley-hold
Analog Output (AO):	Main measure area, measure area, internal temperature, flag status, alarm, frame sync, fail-safe, external communication
Digital Output (DO):	Flag status, alarm, frame sync, fail-safe, external communication

The industrial process interface provides the following in- and outputs:

Name	Description	max range[1]/ status
INPUT 1 / 2 / 3	Analog or digital input	0-10 V [2]
AO1 / 2 / 3	Analog output 1, 2 and 3 Alarm output 1, 2 and 3	0-10 V 0/4-20 mA
DO1 / 2 / 3	Relay output 1, 2 and 3	open/ closed (red LED on) / 0...30 V, 400 mA
FS	Fail-safe relay	open/ closed (green LED on)/ 0...30 V, 400 mA

[1] depending on supply voltage; for 0-10 V on the AO the PIF has to be powered with min. 12 V.
[2] the AI is designed for max. 24 V, the voltage level above 10 V is not interpreted

The industrial PIF has a maximum of 3 analog outputs. To use more outputs, you can cascade up to three PIFs, allowing you to use up to 9 analog or alarm outputs in total.

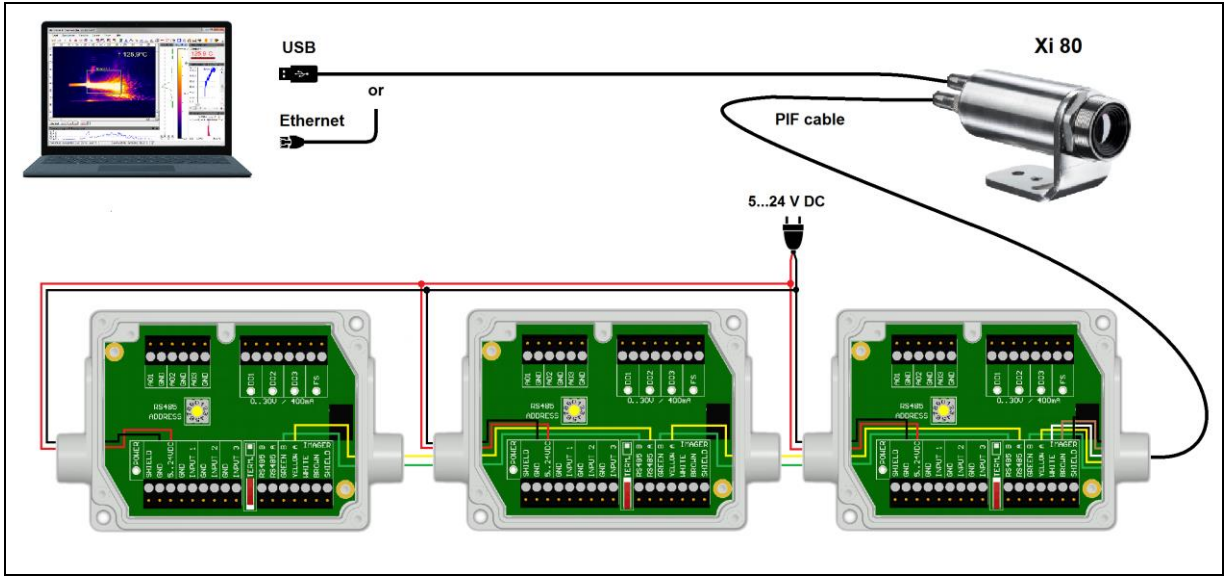

Figure 29: Connection of 3 industrial PIFs via RS485

Each stackable industrial PIF must have its own **RS485 address**. The address must be set directly on the board and in the software. For the PIF which is the furthest away the **120R switch (TERM. – Termination)** has to be set.

The process interface has an integrated fail-safe mode. This allows to control conditions like interruption of cables, shut-down of the software etc. and to give out these conditions as an alarm. The time constant of the fail-safe is 1.5 seconds.

Controlled conditions on camera and software	**Standard Process interface ACXIIOCB1**	**Industrial Process interface ACXIPIFCBxx**
Interruption USB cable to camera	✓	✓
Interruption data cable camera - PIF	✓	✓
Interruption power supply PIF	✓	✓
Shut-down of PIX Connect software	✓	✓
Crash of PIX Connect software	-	✓
Fail-Safe-Output	0 mA at analog output (AO)	open contact (fail-safe relay)/ green LED off

4.1.6 Industrial Process Interface for Xi 400 (optional)

For use in industrial environment the industrial process interface with 500 V AC_{RMS} isolation voltage between Xi and process is available (connection box with IP65, 5 m, 10 m or 20 m standard or high temperature cable for camera connection, terminal for process integration). **[►Appendix F – Wiring diagrams PIF]**

Pin assignment PIF cable (industrial process interface)

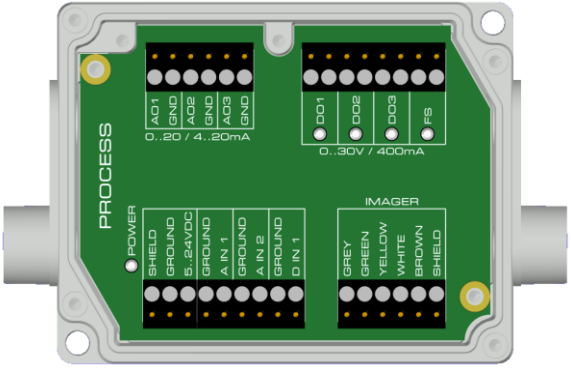

GREY	Interrupt
GREEN	SCL (I^2C)
YELLOW	SDA (I^2C)
WHITE	3.3 V
BROWN	GND
SHIELD	GND

Figure 30: Connections of the industrial Process Interface for Xi 400

The process interface can be activated via the software choosing the following options:

Analog Input (AI):	Emissivity, ambient temperature, reference temperature, uncommitted value, flag control, triggered recording, triggered snapshots, triggered line-scanner, triggered event grabber, reset peak-/valley-hold
Analog Output (AO):	Main measure area, measure area, internal temperature, flag status, alarm, frame sync, fail-safe, external communication
Digital Input (DI):	Flag control, triggered recording, triggered snapshots, triggered line-scanner, triggered event grabber, reset peak-/valley-hold

The industrial process interface provides the following inputs and outputs:

Name	Description	max range[1]/ status
A IN 1 / 2	Analog input 1 and 2	0-10 V [2]
D IN 1	Digital input (active-low = 0…0,6 V)	24 V
AO1 / 2 / 3	Analog output 1, 2 and 3 Alarm output 1, 2 and 3	0/4-20 mA
DO1 / 2/ 3	Relay output 1, 2 and 3 [3]	open/ closed (red LED on) / 0...30 V, 400 mA
FS	Fail-safe relay	open/ closed (green LED on)/ 0...30 V, 400 mA

*[1] depending on supply voltage; for 0-20 mA on the AO the PIF has to be powered with min. 5V < (1.5 + working resistance * 0.021) < 24 V; Example: R_{Load} = 500 ohm → U_{min} = 1.5 + 500 * 0.021 = 12 V, R_{Load} = 100 ohm → U_{min} = 1.5 + 100 * 0.021 = 3.6 V → min. 5 V*
[2] the AI is designed for max. 24 V, the voltage level above 10 V is not interpreted
[3] active if AO1, 2 or 3 is/ are programmed as alarm output

The alarm output can be configured as a threshold between **0-4 mA** for **no alarm** and between **10-20 mA** as **alarm**. For values outside the respective range, the relay does not switch on the DO.

The process interface has an integrated fail-safe mode. This allows to control conditions like interruption of cables, shut-down of the software etc. and to give out these conditions as an alarm. The time constant of the fail-safe is 1.5 seconds.

Controlled conditions on camera and software	**Standard Process interface ACPIPIF**	**Industrial Process interface ACPIPIFMACBxx**
Interruption USB cable to camera	✓	✓
Interruption data cable camera - PIF	✓	✓
Interruption power supply PIF	✓	✓
Shut-down of PIX Connect software	✓	✓
Crash of PIX Connect software	-	✓
Fail-Safe-Output	0 V at analog output (AO)	open contact (fail-safe relay)/ green LED off

4.2 Example for a Fail-Safe monitoring of the Xi with a PLC

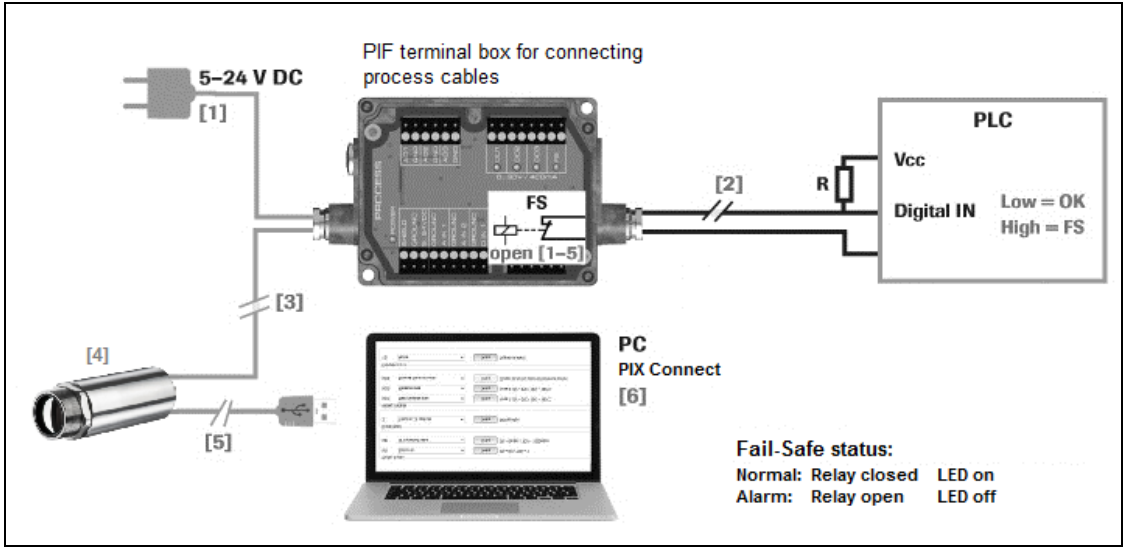

Figure 31: Fail-Safe monitoring states

Fail-Safe monitoring states

[1]	Breakdown of PIF power supply	[4]	Malfunction of Xi
[2]	Cable break of fail-safe cable	[5]	Breakdown of Xi power supply/ Interruption of USB cable
[3]	Interruption of cable Xi-PIF	[6]	Malfunction of PIX Connect software

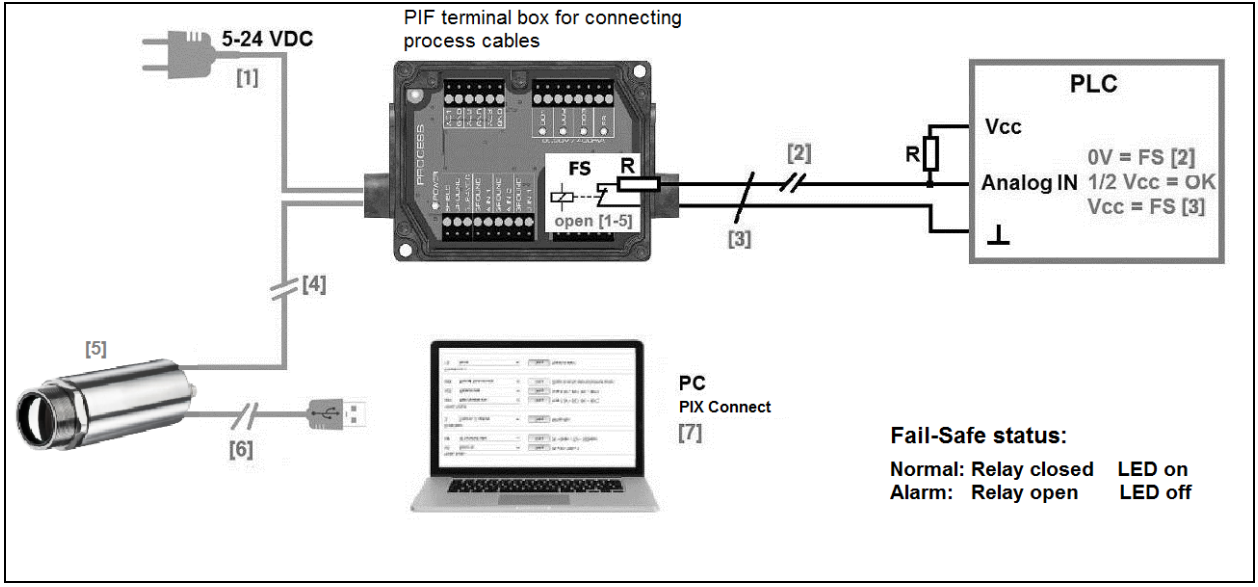

Figure 32: Fail-Safe monitoring states

Fail-Safe monitoring states

[1]	Breakdown of PIF power supply	[5]	Malfunction of Xi
[2]	Cable break of fail-safe cable	[6]	Breakdown of Xi power supply/ Interruption of USB cable
[3]	Short circuit of fail-safe cable	[7]	Malfunction of PIX Connect software
[4]	Interruption of cable Xi-PIF		

4.3 USB cable extension for Xi 400

The maximum USB cable length is 20 m. For greater distances between Xi 400 and computer or for stand-alone solutions the optional USB Server Gigabit (**Part No.: ACPIUSBSGB**) is provided:

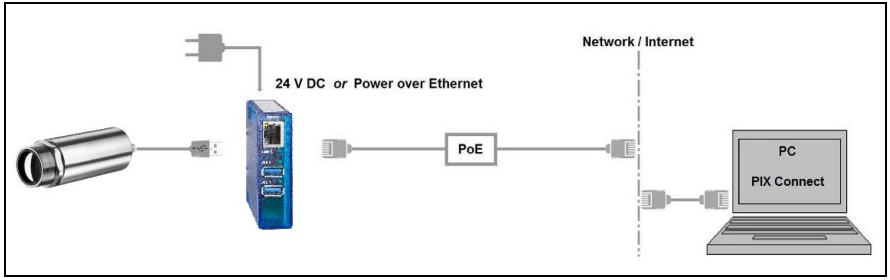

Figure 33: USB Server Gigabit

5 Functions

5.1 Autonomous operation Xi 80

A special feature of the Xi 80 is the autonomous operation. There is no need for a permanent connection to the PIX Connect software. Only a few settings must be set in advance in the software.

To do this, connect the PIF and USB cables to the device. Then connect the Xi to your PC and start the PIX Connect software (see **6 Software PIX Connect**).

Position and focus (see **2.4 Optical specifications**) the camera so that your object to be measured is perfectly visible in the image. First define the desired measurement area with the corresponding mode you want to output.

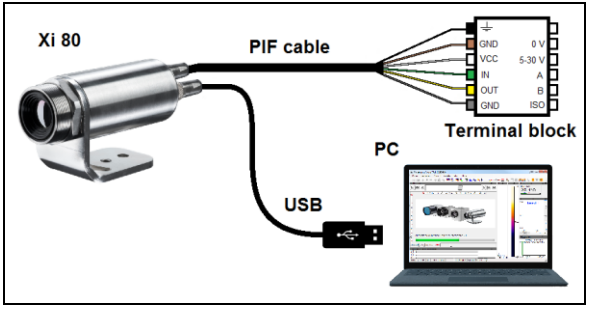

Figure 34: Connection Xi 80 to PC via USB

Now go to the configuration menu on **Device (PIF)**. There you first select the **PIF type** (in this case: **Internal PIF**). Then select under **Analog Outputs (AO)** the function that is to be output autonomously. Then press **Setup**, make your settings and make sure that the checkbox is set to **using autonomously by device**. By pressing the **OK** button an @ sign can be found in the configuration menu Devices (PIF), which indicates the autonomous operation.

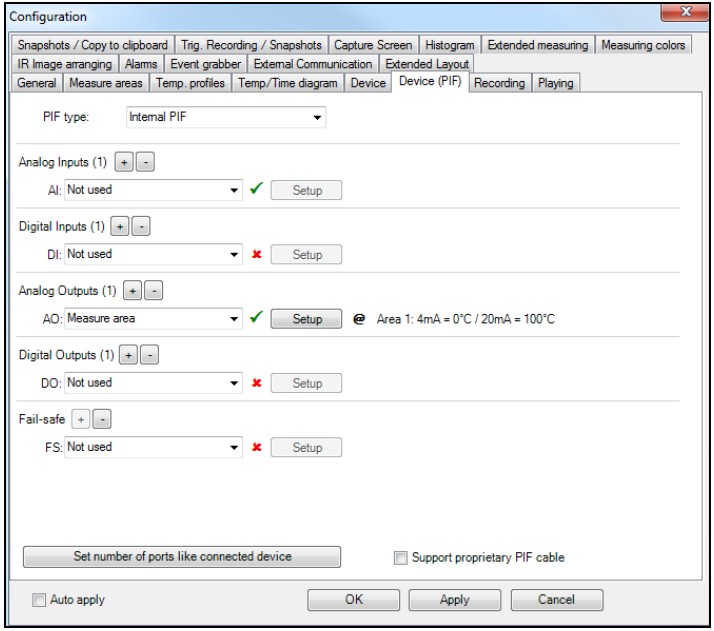

Figure 35: Configurations menu Device (PIF)

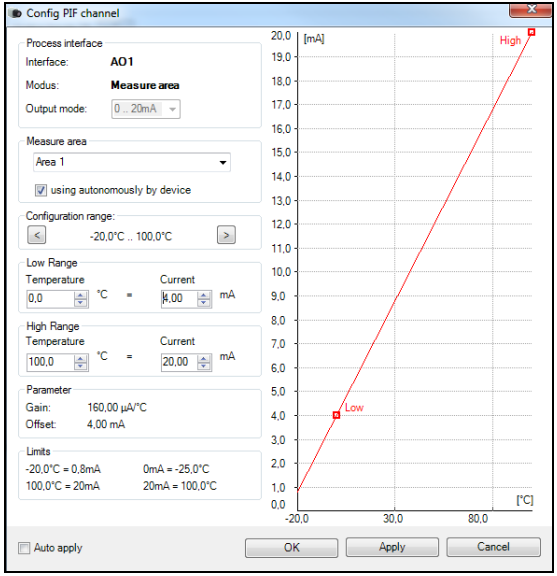

Figure 36: Setup

In general these are all the settings that must be set in the PIX Connect software in order to operate the device autonomously. You can now close the software and then disconnect the USB cable. In order to start up the device autonomously, a 5-30 V power supply must be connected to the terminal block. Now the used input/output has to be connected. The resulting value can be displayed for example on a multimeter (see **Figure 37**). When using this variant, it can last for about half a minute until the device is ready for use in autonomous mode.

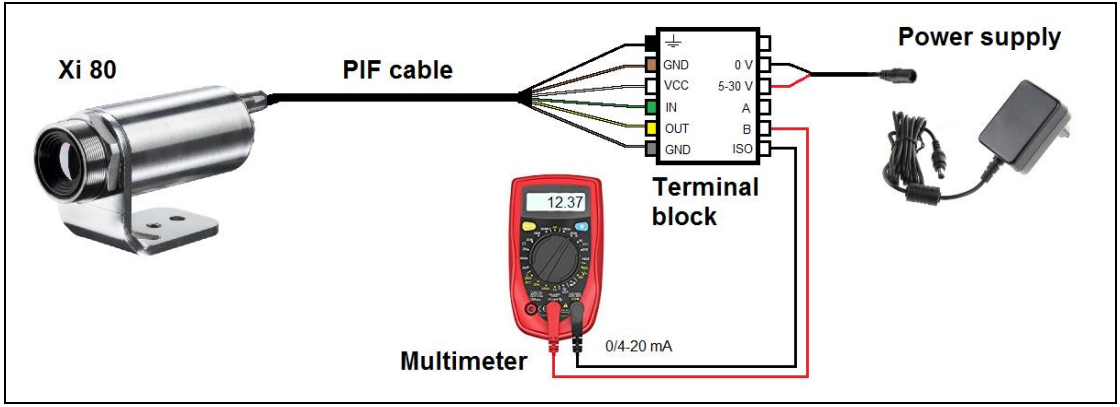

Figure 37: Electrical installation for autonomous operation Xi 80

- Autonomous operation also works via the industrial/stackable PIF of the Xi 80. The device is powered by the power supply of the PIF.
- Up to **9 measure areas** can be output autonomously (firmware 3013 or higher required). The use of three stackable PIFs is required. Three analog outputs are possible per stackable PIF. **Note**: The first three measurement areas 1-3 have a response time of 20 ms, the measurement areas 4-6 a response time of 40 ms and the measurement areas 7-9 a response time of 60 ms.
- Autonomous mode cannot be set using the *Main measure area* function. To output a measure area autonomously, the function *Measure area* must be used.

Hot- / Coldspot function in autonomous operation

The setting for a hot- or coldspot in autonomous mode differs from the general procedure. It is not enough to mark a measuring area as hot- or coldspot. Instead, a **user defined rectangle** must be selected under the tab **measure areas** of the configuration dialog. In addition, under **Mode**, you must set whether the **maximum** (for hotspot) or **minimum** (for coldspot) should be output.

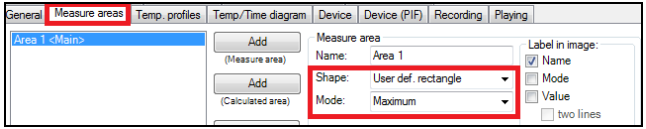

Figure 38: Setting a hotspot for autonomous operation

For a hot- or coldspot output in the full field of view of the camera, the user defined rectangle must also fill out this size.

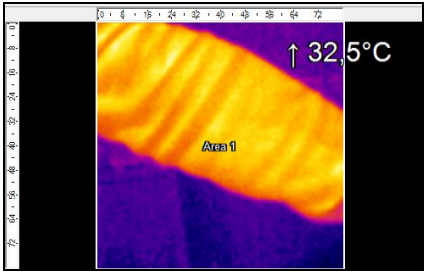

Figure 39: Measure area over entire field of view

5.2 Ethernet Xi 80

The Xi 80 has a direct Ethernet interface. The advantage is cable lengths of up to 100 m. For example, a switch can be used to extend the distances. The associated Ethernet cable (**Order No.: ACXIETCBx**) must be ordered separately. Ethernet is supported from software version Rel. 3.2.3020.0 and firmware 3008.

Using the Ethernet connection, the device must be supplied with power. This can be done either via the internal PIF cable via the terminal block (5-30 V), via the stackable PIF (5-24 V, **Order No.: ACXIPIFCBx**) or via PoE (Power over Ethernet). For the PoE variant, a PoE adapter (**Order No.: ACXIETPOECB1**) and a PoE injector (**Order No.: ACPIPOE**) or PoE switch (e.g. Netgear GS110TP) are also required.

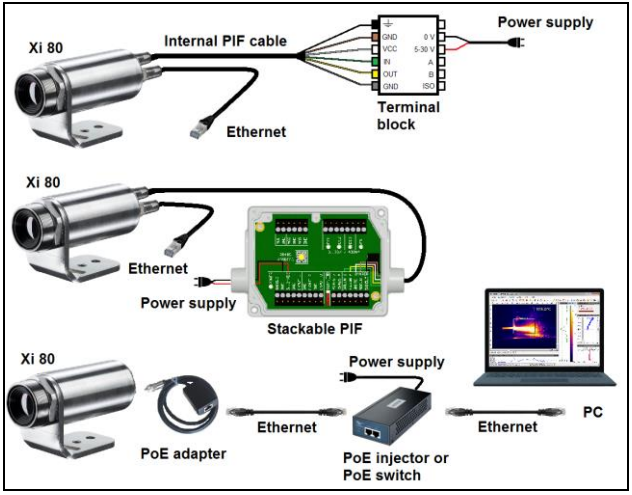

Figure 40: Possibilities of power supply for Xi 80 via Ethernet connection

Ethernet setup software and PC (Point-to-Point-Connection)

To make the appropriate address settings go to **Tools**, **Extended** and **TCP/IP Settings**. This setup is done via the camera's USB connection.

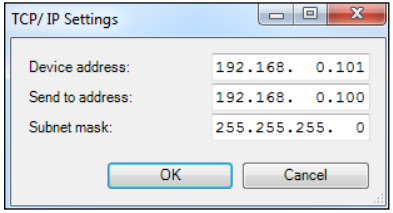

The address for the device is assigned under **Device address**. This must have a different address (last block) to the other participant (e.g., PC) (**Send to address**). It is important that the network part (first three blocks) must be identical for both addresses. The address range of the individual blocks can be between 0 and 255.

Furthermore, the Ethernet function has to be activated. This is done under **Tools**, **Extended** and **Options**.

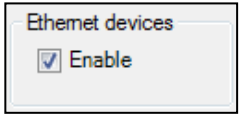

After pressing **OK**, a Windows Firewall window appears. Make sure to select allow all three networks parts (domain, private, public) to allow the communication with the device:

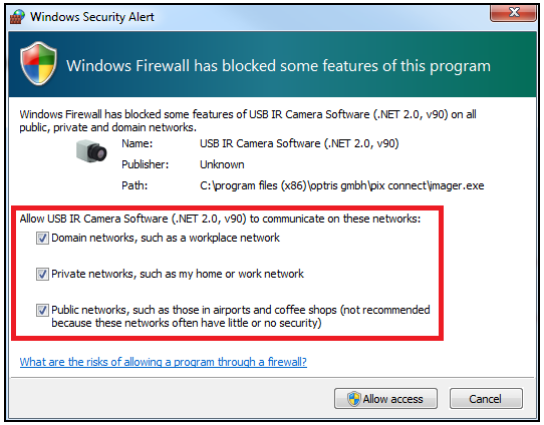

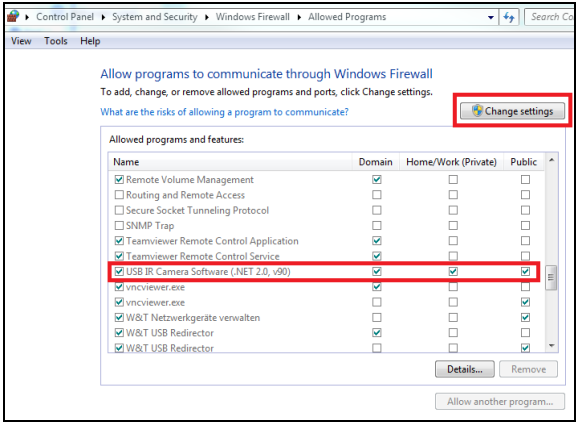

These settings can also be activated afterwards in the Windows Firewall settings of the PC (under *Windows Firewall* and *Allow a program or feature through Windows Firewall*)

Then you can close the software and disconnect the USB connection to the computer. Replace the USB cable with a purchased Ethernet cable.

Now you have to set up the network address of the PC. To do this, go to **Control Panel** and open the **Network and Sharing Center**. Go on **LAN connection**.

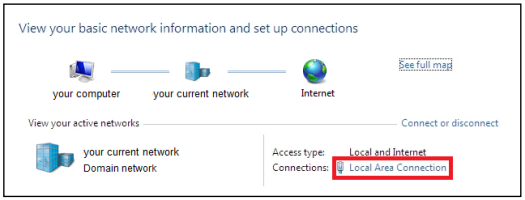

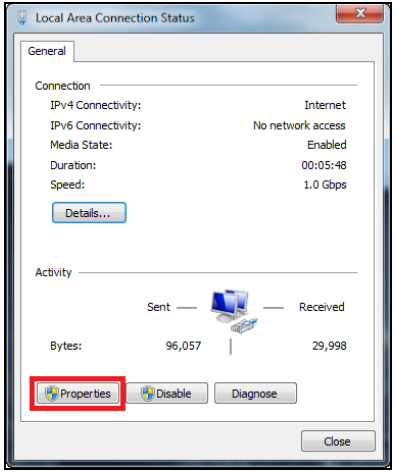

Click on **Properties**.

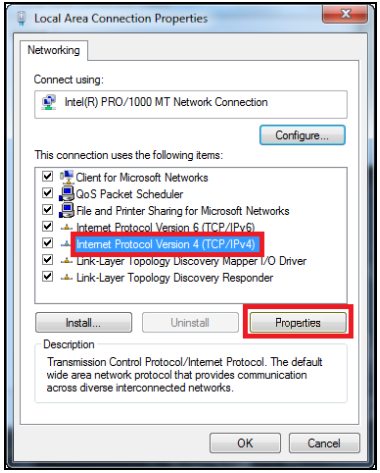

Mark **Internet protocol Version 4 (TCP/IPv4)** and go to **Properties** again

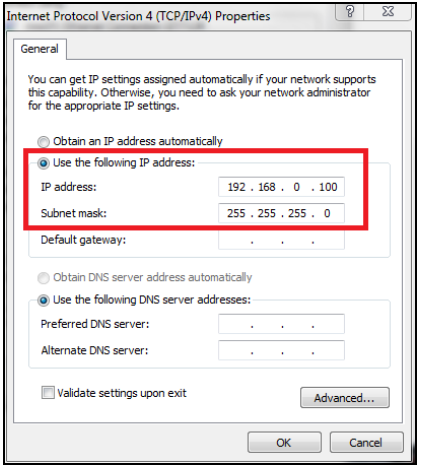

In the register card **General** enable the checkbox **Use the following IP address**. Now enter a user defined IP address for your PC (e.g. 192.168.0.100). This must be identical to the address set in the PIX Connect software.

Then close the windows with **OK** and you are finished with the Ethernet setup.

Start again the PIX Connect software. The existing Ethernet connection can be found in the menu under **Devices** and is identified by a network symbol and the network address of the device.

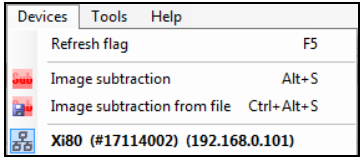

The device is now running via the Ethernet connection.

6 Software PIX Connect

Minimum system requirements:

- Windows 7, Windows 8, Windows 10
- USB interface
- Hard disc with at least 30 MByte of free space
- At least 128 MByte RAM
- CD-ROM drive

A detailed description is provided in the software manual on the software CD. See also **`Help`** menu in the PIX Connect software (**`Help`** → **`Documentation`**).

6.1 Installation and initial start-up

- All drivers are booted via Windows OS automatically. A driver installation is not necessary.
- By default the program starts automatically in the installed language.

1. Insert the installation CD into the according drive on your computer. If the **`autorun option`** is activated the installation wizard will start automatically.

2. Otherwise start **`setup.exe`** from the CD-ROM. Follow the instructions of the wizard until the installation is finished.

   The installation wizard places a launch icon on the desktop and in the start menu:
   `Start\Programs\Optris GmbH\PIX Connect`

3. To connect the camera to the PC, plug the USB cable to the camera first. Afterwards connect it with the PC (to disconnect the camera and the computer remove the USB cable from the computer first and then disconnect it from the camera).

4. Start the software.

   At the initial start the software asks for the calibrations files which are available via internet or on the CD (only for Xi 400). With the Xi 80, the calibration files are already included in the device.

5. Install the calibration files at first start of the software (only necessary for Xi 400).

   After the calibration files have been installed the live image from the camera is shown inside a window on your PC screen.

6. Choose the desired language in the menu **`Tools`** → **`Language`**.

7. Adjust the focus of the image by using the distance function in the software (Menu **View/ Windows/ Distance** or over the icon):

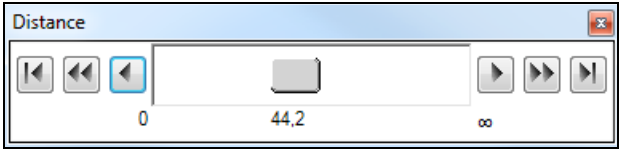

6.2 Software window

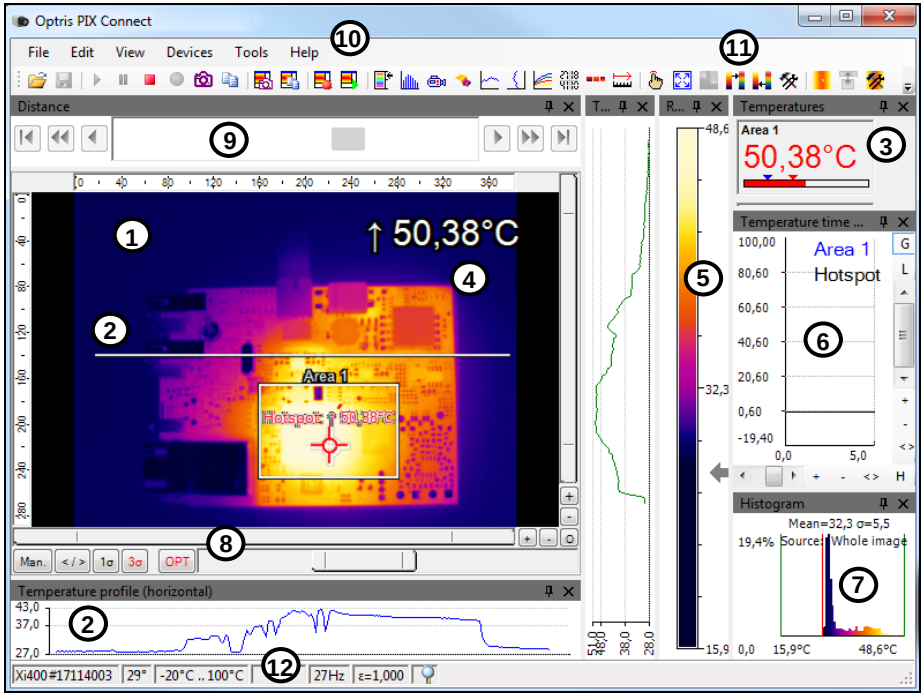

Figure 41: Software window

1 IR image from the camera

2 Temperature profile: Shows the temperatures along max. 2 lines at any size and position in the image.

3 Control displays: Displays all temperature values in the defined measure areas like Cold Spots, Hot Spots, temperature at cursor, internal temperature and chip temperature.

Alarm settings: Bar showing the defined temperature thresholds for low alarm value (blue arrow) and high alarm value (red arrow). The color of numbers within control displays changes to red (when temp. above the high alarm value) and to blue (when temp. below the low alarm value).

4 Temperature of measure area: Analyses the temperature according to the selected shape, e.g. average temperature of the rectangle. The value is shown inside the IR image and the control displays.

5 Reference bar: Shows the scaling of temperature within the color palette.

6 Temperature time diagram: Shows the temperature curves over time for selectable region of interest (ROI)

7 Histogram: Shows the statistic distribution of single temperature values.

8 Automatic / manual scaling of the palette (displayed temperature range): Man., </> (min, max), 1**σ** : 1 Sigma, 3**σ** : 3 Sigma, OPT: Palette optimization

9 Distance function: Adjustment of the motor focus to focus the IR picture

10 Menu and Toolbar (Icons)

11 Icon enabling switching between color palettes

12 Status bar: Serial number, optic, temperature range, cursor position, device framerate/ display framerate, emissivity, ambient temperature, flag status

6.3 Basis features of the software PIX Connect

Extensive infrared camera software

- No restrictions in licensing
- Modern software with intuitive user interface
- Remote control of camera via software
- Display of multiple camera images in different windows
- Compatible with Windows 7, 8 and 10

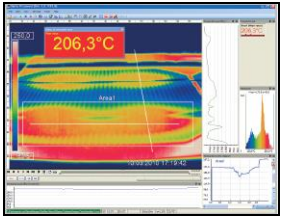

High level of individualization for customer specific display

- Various language option including a translation tool
- Temperature display in °C or °F
- Different layout options for an individual setup (arrangement of windows, toolbar)
- Range of individual measurement parameter fitting for each application
- Adaption of thermal image (mirror, rotate)
- Individual start options (full screen, hidden, etc.)

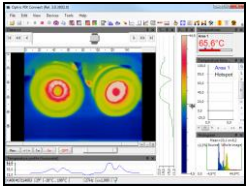

Video recording and snapshot function (IR)

- Recording of video sequences and detailed frames for further analysis or documentation
- Adjustment of recording frequency to reduce data volume
- Display of snapshot history for immediate analysis

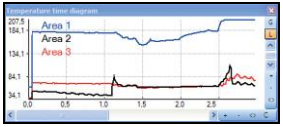

Extensive online and offline data analysis

- Analysis supported by measurement fields, hot and cold spot searching, image subtraction
- Real time temperature information within main window as digital or graphic display (line profile, temperature time diagram)
- Slow motion repeat of radiometric files and analysis without camera being connected
- Editing of sequences such as cutting and saving of individual images
- Various color palettes to highlight thermal contrasts

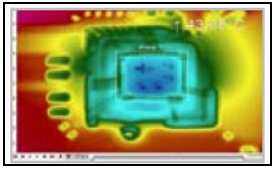

Automatic process control

- Individual setup of alarm levels depending on the process
- Definition of visual or acoustic alarms and analog data output
- Analog and digital signal input (process parameter)
- External communication of software via COM-Ports and DLL
- Adjustment of thermal image via reference values

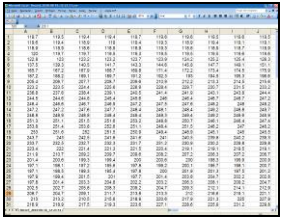

Temperature data analysis and documentation

- Triggered data collection
- Radiometric video sequences (*.ravi) radiometric snapshots (*.tiff)
- Text files including temp. information for analysis in Excel (*.csv, *.dat)
- Data with color information for standard programs such as Photoshop or Windows Media Player (*.avi, *.tiff)
- Data transfer in real time to other software programs DLL or COM-Port interfaces

7 Basics of Infrared Thermometry

Depending on the temperature each object emits a certain amount of infrared radiation. A change in the temperature of the object is accompanied by a change in the intensity of the radiation.

Searching for new optical material William Herschel by chance found the infrared radiation in 1800.

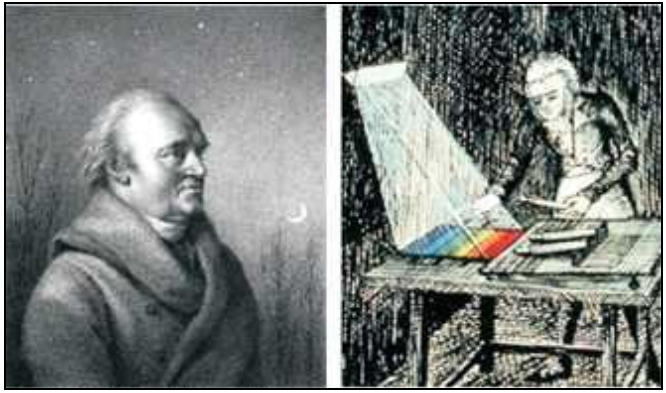

Figure 42: William Herschel (1738-1822)

He blackened the peak of a sensitive mercury thermometer. This thermometer, a glass prism that led sun rays onto a table made his measuring arrangement. With this, he tested the heating of different colors of the spectrum. Slowly moving the peak of the blackened thermometer through the colors of the spectrum, he

noticed the increasing temperature from violet to red. The temperature rose even more in the area behind the red end of the spectrum. Finally he found the maximum temperature far behind the red area.

Nowadays this area is called “infrared wavelength area”.

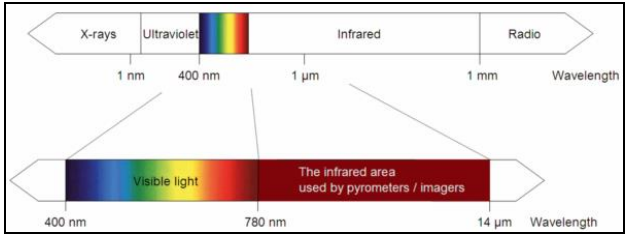

Figure 43: The electromagnetic spectrum and the area used for temperature measurement

For the measurement of “thermal radiation” infrared thermometry uses a wave-length ranging between 1 µm and 20 µm. The intensity of the emitted radiation depends on the material. This material contingent constant is described with the help of the emissivity which is a known value for most materials (►**8 Emissivity**).

Infrared thermometers are optoelectronic sensors. They calculate the surface temperature on the basis of the emitted infrared radiation from an object. The most important feature of infrared thermometers is that they enable the user to measure objects contactless. Consequently, these products help to measure the temperature of inaccessible or moving objects without difficulties.

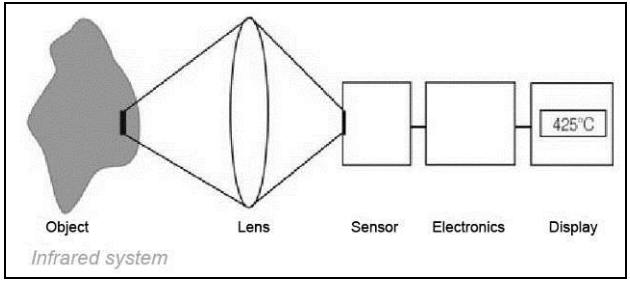

Figure 44: Main principle of non-contact thermometry

Infrared thermometers basically consist of the following components:

- Lens
- Spectral filter
- Detector
- Electronics (amplifier/ linearization/ signal processing)

The specifications of the lens decisively determine the optical path of the infrared thermometer, which is characterized by the ratio Distance to Spot size. The spectral filter selects the wavelength range, which is relevant for the temperature measurement. The detector in cooperation with the processing electronics transforms the emitted infrared radiation into electrical signals.

The advantages of non-contact thermometry are clear - it supports:

- temperature measurements of moving or overheated objects and of objects in hazardous surroundings
- very fast response and exposure times
- measurement without inter-reaction, no influence on the
- measuring object
- non-destructive measurement
- long lasting measurement, no mechanical wear

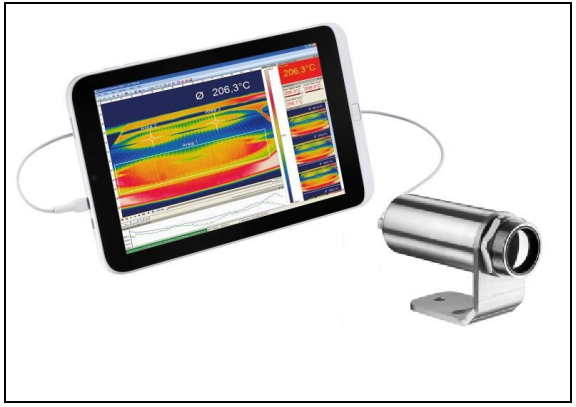

Figure 45: Non-contact thermometry

Application field:

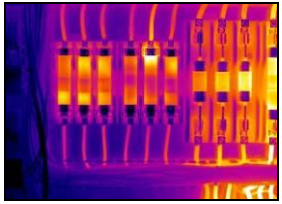

Monitoring of electronic cabinets

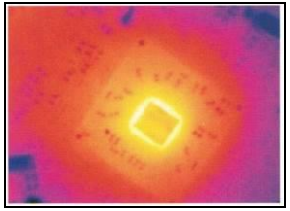

R&D of electronics

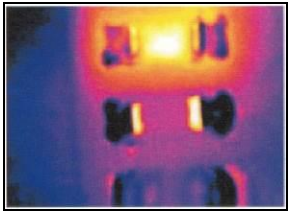

R&D of electronic parts

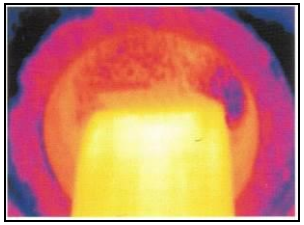

Process control extruding plastic parts

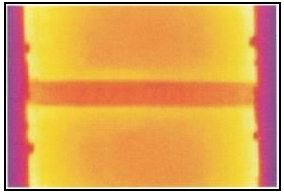

Process control manufacturing solar modules

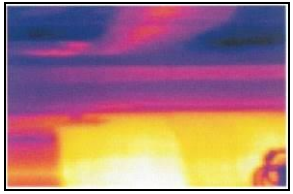

Process control at calendering

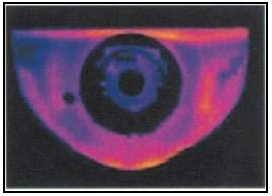

R&D of mechanical parts

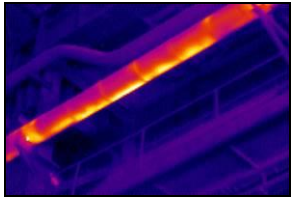

Monitoring of cables

8 Emissivity

8.1 Definition

The intensity of infrared radiation, which is emitted by each body, depends on the temperature as well as on the radiation features of the surface material of the measuring object. The emissivity (ε – Epsilon) is used as a material constant factor to describe the ability of the body to emit infrared energy. It can range between 0 and 100 %. A “blackbody” is the ideal radiation source with an emissivity of 1.0 whereas a mirror shows an emissivity of 0.1.

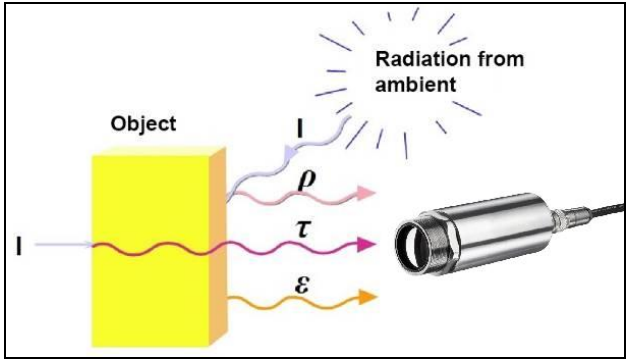

I	IR radiation
ε	Emission
ρ	Reflection
τ	Transmission

$$\varepsilon + \rho + \tau = 1$$

Figure 46: Composition of IR radiation

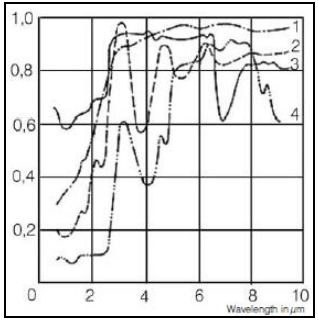

Figure 47: Spectral emissivity of several materials: **1** Enamel, **2** Plaster, **3** Concrete, **4** Chamotte

If the emissivity chosen is too high, the infrared thermometer may display a temperature value which is much lower than the real temperature – assuming the measuring object is warmer than its surroundings. A low emissivity (reflective surfaces) carries the risk of inaccurate measuring results by interfering infrared radiation emitted by background objects (flames, heating systems, chamottes). To minimize measuring errors in such cases, the handling should be performed very carefully and the unit should be protected against reflecting radiation sources.

8.2 Determination of unknown emissivity

► First determine the actual temperature of the measuring object with a thermocouple or contact sensor. Second, measure the temperature with the infrared thermometer and modify the emissivity until the displayed result corresponds to the actual temperature.

► If you monitor temperatures of up to 380 °C you may place a special plastic sticker (emissivity dots – **Part No.: ACLSED**) onto the measuring object, which covers it completely.

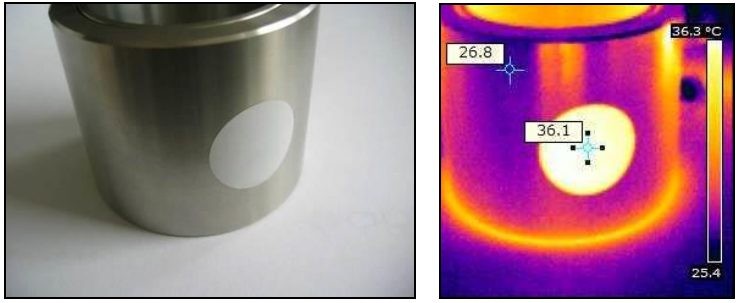

Figure 48: Plastic sticker at metal surface

Set the emissivity to 0.95 and take the temperature of the sticker. Afterwards, determine the temperature of the adjacent area on the measuring object and adjust the emissivity according to the value of the temperature of the sticker.

► Cove a part of the surface of the measuring object with a black, flat paint with an emissivity of 0.98. Adjust the emissivity of your infrared thermometer to 0.98 and take the temperature of the colored surface. Afterwards, determine the temperature of a directly adjacent area and modify the emissivity until the measured value corresponds to the temperature of the colored surface.

Figure 49: Shiny metal surface **left** and blackened metal surface **right**

CAUTION: On all three methods the object temperature must be different from ambient temperature.

8.3 Characteristic emissivity

In case none of the methods mentioned above help to determine the emissivity you may use the emissivity table ► **Appendix A** and **Appendix B**. These are average values, only. The actual emissivity of a material depends on the following factors:

- temperature
- measuring angle
- geometry of the surface
- thickness of the material
- constitution of the surface (polished, oxidized, rough, sandblast)
- spectral range of the measurement
- transmissivity (e.g. with thin films)

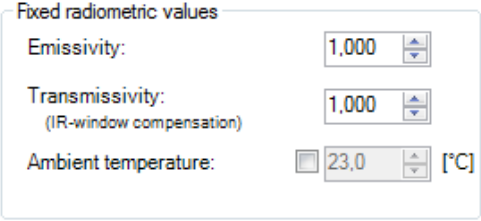

Figure 50: Adjustment of the emissivity in the software PIX Connect (menu `Tools/ Configuration/ Device`)

Appendix A – Table of emissivity for metals

Material		typical Emissivity			
Spectral response		1.0 µm	1.6 µm	5.1 µm	8-14 µm
Aluminium	non oxidized	0.1-0.2	0.02-0.2	0.02-0.2	0.02-0.1
	polished	0.1-0.2	0.02-0.1	0.02-0.1	0.02-0.1
	roughened	0.2-0.8	0.2-0.6	0.1-0.4	0.1-0.3
	oxidized	0.4	0.4	0.2-0.4	0.2-0.4
Brass	polished	0.35	0.01-0.05	0.01-0.05	0.01-0.05
	roughened	0.65	0.4	0.3	0.3
	oxidized	0.6	0.6	0.5	0.5
Copper	polished	0.05	0.03	0.03	0.03
	roughened	0.05-0.2	0.05-0.2	0.05-0.15	0.05-0.1
	oxidized	0.2-0.8	0.2-0.9	0.5-0.8	0.4-0.8
Chrome		0.4	0.4	0.03-0.3	0.02-0.2
Gold		0.3	0.01-0.1	0.01-0.1	0.01-0.1
Haynes	alloy	0.5-0.9	0.6-0.9	0.3-0.8	0.3-0.8
Inconel	electro polished	0.2-0.5	0.25	0.15	0.15
	sandblast	0.3-0.4	0.3-0.6	0.3-0.6	0.3-0.6
	oxidized	0.4-0.9	0.6-0.9	0.6-0.9	0.7-0.95
Iron	non oxidized	0.35	0.1-0.3	0.05-0.25	0.05-0.2
	rusted		0.6-0.9	0.5-0.8	0.5-0.7
	oxidized	0.7-0.9	0.5-0.9	0.6-0.9	0.5-0.9
	forged, blunt	0.9	0.9	0.9	0.9
	molten	0.35	0.4-0.6		
Iron, casted	non oxidized	0.35	0.3	0.25	0.2
	oxidized	0.9	0.7-0.9	0.65-0.95	0.6-0.95

Material		typical Emissivity			
Spectral response		1.0 µm	1.6 µm	5.1 µm	8-14 µm
Lead	polished	0.35	0.05-0.2	0.05-0.2	0.05-0.1
	roughened	0.65	0.6	0.4	0.4
	oxidized		0.3-0.7	0.2-0.7	0.2-0.6
Magnesium		0.3-0.8	0.05-0.3	0.03-0.15	0.02-0.1
Mercury			0.05-0.15	0.05-0.15	0.05-0.15
Molybdenum	non oxidized	0.25-0.35	0.1-0.3	0.1-0.15	0.1
	oxidized	0.5-0.9	0.4-0.9	0.3-0.7	0.2-0.6
Monel (Ni-Cu)		0.3	0.2-0.6	0.1-0.5	0.1-0.14
Nickel	electrolytic	0.2-0.4	0.1-0.3	0.1-0.15	0.05-0.15
	oxidized	0.8-0.9	0.4-0.7	0.3-0.6	0.2-0.5
Platinum	black		0.95	0.9	0.9
Silver		0.04	0.02	0.02	0.02
Steel	polished plate	0.35	0.25	0.1	0.1
	rustless	0.35	0.2-0.9	0.15-0.8	0.1-0.8
	heavy plate			0.5-0.7	0.4-0.6
	cold-rolled	0.8-0.9	0.8-0.9	0.8-0.9	0.7-0.9
	oxidized	0.8-0.9	0.8-0.9	0.7-0.9	0.7-0.9
Tin	non oxidized	0.25	0.1-0.3	0.05	0.05
Titanium	polished	0.5-0.75	0.3-0.5	0.1-0.3	0.05-0.2
	oxidized		0.6-0.8	0.5-0.7	0.5-0.6
Wolfram	polished	0.35-0.4	0.1-0.3	0.05-0.25	0.03-0.1
Zinc	polished	0.5	0.05	0.03	0.02
	oxidized	0.6	0.15	0.1	0.1

Appendix B – Table of emissivity for non-metals

Material		typical Emissivity			
Spectral response		1.0 µm	2.2 µm	5.1 µm	8-14 µm
Asbestos		0.9	0.8	0.9	0.95
Asphalt				0.95	0.95
Basalt				0.7	0.7
Carbon	non oxidized		0.8-0.9	0.8-0.9	0.8-0.9
	graphite		0.8-0.9	0.7-0.9	0.7-0.8
Carborundum			0.95	0.9	0.9
Ceramic		0.4	0.8-0.95	0.8-0.95	0.95
Concrete		0.65	0.9	0.9	0.95
Glass	plate		0.2	0.98	0.85
	melt		0.4-0.9	0.9	
Grit				0.95	0.95
Gypsum				0.4-0.97	0.8-0.95
Ice					0.98
Limestone				0.4-0.98	0.98
Paint	non alkaline				0.9-0.95
Paper	any color			0.95	0.95
Plastic >50 µm	non transparent			0.95	0.95
Rubber				0.9	0.95
Sand				0.9	0.9
Snow					0.9
Soil					0.9-0.98
Textiles				0.95	0.95
Water					0.93
Wood	natural			0.9-0.95	0.9-0.95

Appendix C – Quick start for serial communication

Introduction

One special feature of the PIX Connect software contains the possibility to communicate via a serial COM-Port interface. This can be a physical COM-Port or a virtual COM-Port (VCP). It must be available on the computer where the PIX connect software is installed.

Setup of the interface

1. Open the **`Options`** dialog and enter the tab "**`Extended Communication`**" to enable the software for the serial communication.

2. Select the mode "**`COM-Port`**" and choose the appropriate port.

3. Select the baud rate that matches the baud rate of the other communication device. The other interface parameters are 8 data bits, no parity and one stop bit (8N1).

   These parameters are used in many other communication devices too. The other station must support 8 bit data.

4. Connect the computer with the communication device. If this is a computer too, use a null modem cable.

Command list

The command list is provided on the software CD and in the PIX Connect software (**`Help`** → **`SDK`**). Every command must expire with CR/LF (0x0D, 0x0A).

Appendix D – Interprocess Communication (IPC)

The description of the initialization procedure as well as the necessary command list is provided on the CD and in the PIX Connect software (**`Help`** → **`SDK`**).
2 SDK packages are available (can be found on the included software CD):

1. **Connect SDK:** requires the PIX Connect software
2. **Direct SDK:** no PIX Connect software required, supports Linux and Windows

The communication to the process imager device is handled by the PIX Connect software (**`Imager.exe`**) only. A dynamic link library (**`ImagerIPC2.dll`**) provides the interprocess communication (IPC) for other attached processes. The DLL can be dynamically linked into the secondary application. Or it can be done static by a lib file too. Both **`Imager.exe`** and **`ImagerIPC2.dll`** are designed for Windows Vista/ 7/ 8/ 10 only. The application must support call-back functions and polling mode.

The **`ImagerIPC2.dll`** will export a bunch of functions that are responsible for initiating the communication, retrieving data and setting some control parameters.

The main difference to the former Version 1 (**`ImagerIPC.dll`**) is the support of more than one Optris Xi via multiple instances of Optris PIX Connect.

Appendix E – PIX Connect Resource Translator

A detailed tutorial is provided on the CD.

PIX Connect is a **`.Net Application`**. Therefore it is ready for localization. Localization as a Microsoft idiom means a complete adaption of resources to a given culture. Learn more about the internationalization topics consult Microsoft's developer documentation on

http://msdn.microsoft.com/en-us/goglobal/bb688096.aspx.

If desired the localization process can be illustrated in detail. Also the resizing of buttons or other visible resources and the support of right-to-left-languages are supported. Experts who have the appropriate tools should handle it. Nevertheless we have developed the small tool "**`Resource Translator`**" to make the translation of the resources of the PIX Connect application possible for everybody.

This tool helps to translate any visible text within the PIX Connect application.

Appendix F – Wiring diagrams PIF for Xi 400

Analog Output:

The maximum load impedance is 500 Ohm.

The analog output can be used as a digital output too. The current value for “**`no alarm`**” and “**`alarm on`**” is set within the software.

Digital Input:

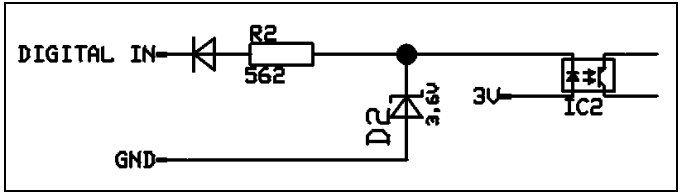

Figure 51: Digital input

The digital input can be activated with a button to the Xi GND-Pin or with a low level CMOS/TTL signal: Low level 0…0.6 V; High level 2…24 V

Example Button:

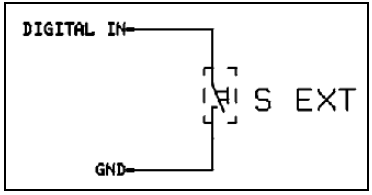

Figure 52: Button

Analog input (usable voltage range: 0 … 10 V):

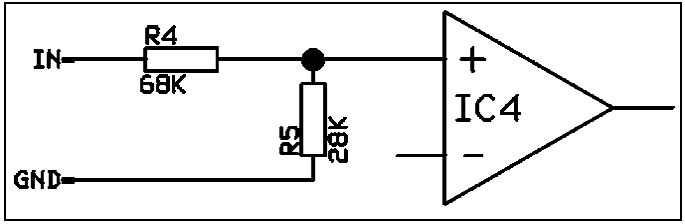

Figure 53: Analog input

Relay output at industrial PIF [Part No.: ACPIPIFMACBxx]

The analog output must be set to “Alarm”. The range for AO1-AO3 can be set in the software (no alarm: 0-4 mA/ alarm: 10-20 mA).

REL1-3 (DO1-DO3): U_{max} = 30 VDC

I_{max} = 400 mA

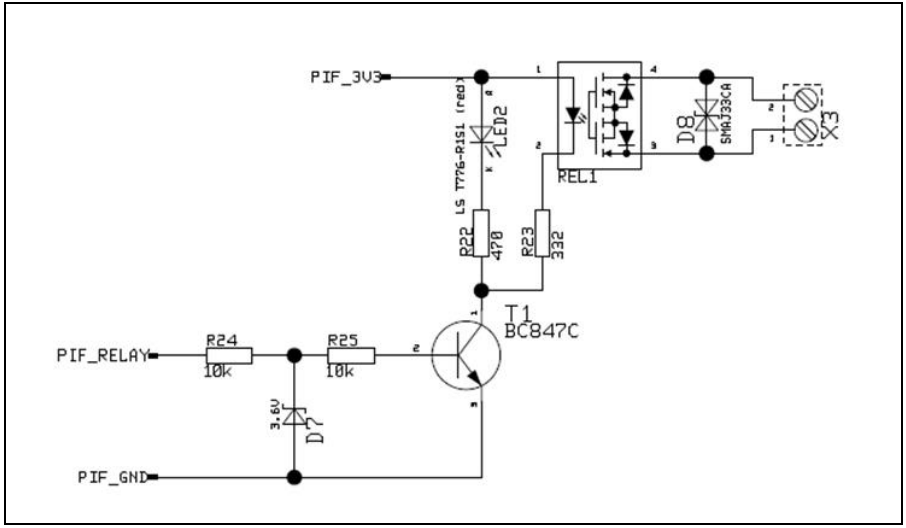

Figure 54: Relay output at industrial PIF

Appendix G – Declaration of Conformity

EG-Konformitätserklärung
EU Declaration of Conformity

optris
infrared measurements

Wir / We

Optris GmbH
Ferdinand Buisson Str. 14
D-13127 Berlin

erklären in alleiniger Verantwortung, dass
declare on our own responsibility that

die Produktserie optris Xi
the product group optris Xi

den Anforderungen der EMV-Richtlinie **2014/30/EU** und der Niederspannungsrichtlinie **2014/35/EU** entspricht.
meets the provisions of the EMC Directive **2014/30/EU** and the Low Voltage Directive **2014/35/EU**.

Angewandte harmonisierte Normen:
Applied harmonized standards:

EMV Anforderungen / EMC General Requirements:

EN 61326-1:2013 (Grundlegende Prüfanforderungen / Basic requirements)
EN 61326-2-3:2013

Gerätesicherheit von Messgeräten / Safety of measurement devices:

EN 61010-1:2010
EN 60825-1:2015 (Lasersicherheit / Laser safety)

Dieses Produkt erfüllt die Vorschriften der Richtlinie **2011/65/EU** (RoHS) des Europäischen Parlaments und des Rates vom 8. Juni 2011 zur Beschränkung der Verwendung bestimmter gefährlicher Stoffe in Elektro- und Elektronikgeräten.
This product is in conformity with Directive **2011/65/EU** (RoHS) of the European Parliament and of the Council of 8 June 2011 on the restriction of the use of certain hazardous substances in electrical and electronic equipment.

Berlin, 13.11.2017

Ort, Datum / place, date

Dr. Ulrich Kienitz
Geschäftsführer / General Manager

optris Xi-MA-E2019-03-A